YINGSHI

PRECISION

Stainless Steel Air Motors

Advanced Line Catalog · 2026

20/30 W ADVANCED LINE AIR MOTOR

Motor size 0		reversible			
Series 67X-	**Type**	**67X-010**	**67X-020**	**67X-030**	**67X-040**
ATEX conform	Part no.	306700B	306700C	306700D	306700E
ATEX specification		**C**	**C**	**A**	**A**
Nominal power	W / HP	20 / 0.03	20 / 0.03	20 / 0.03	20 / 0.03
Nominal speed	rpm	3000	2500	650	475
Speed (idling)	rpm	6000	5000	1300	950
Nominal torque	Nm / in.lbs	0.06 / 0.5	0.08 / 0.7	0.29 / 2.6	0.4 / 3.5
Start torque min.	Nm / in.lbs	0.09 / 0.8	0.12 / 1	0.44 / 3.9	0.6 / 5.3
Stall torque	Nm / in.lbs	0.12 / 1	0.15 / 1.33	0.55 / 4.87	0.75 / 6.64
Air consumption	Nm^3/min / cfm	0.1 / 3	0.1 / 3	0.1 / 3	0.1 / 3
Weight	kg / lbs	0.16 / 0.3	0.16 / 0.3	0.16 / 0.3	0.16 / 0.3
Hose I.D., supply air/exhaust air	mm / in.	3 / 1/8	3 / 1/8	3 / 1/8	3 / 1/8
Included in delivery:		2 Slide connectors (M 5)			

Motor size 0		right rotation			
Series 67X-	**Type**	**67X-010R**	**67X-020R**	**67X-030R**	**67X-040R**
ATEX conform	Part no.	3067000B	3067000C	3067000D	3067000E
ATEX specification		**C**	**C**	**A**	**A**
Nominal power	W / HP	30/0.04	30/0.04	30/0.04	30/0.04
Nominal speed	rpm	3000	2500	650	500
Speed (idling)	rpm	6000	5000	1300	1000
Nominal torque	Nm / in.lbs	0.1/0.885	0.11/0.97	0.44/3.89	0.57/5.04
Start torque min.	Nm / in.lbs	0.12/1.06	0.17/1.5	0.66/5.84	0.86/7.61
Stall torque	Nm / in.lbs	0.18/1.59	0.22/1.95	0.84/7.43	1.09/9.65
Air consumption	Nm^3/min / cfm	0.1/3.53	0.1/3.53	0.1/3.53	0.1/3.53
Weight	kg / lbs	0.13/0.29	0.13/0.29	0.13/0.29	0.13/0.29
Hose I.D., supply air/exhaust air	mm / in.	3 / 1/8	3 / 1/8	3 / 1/8	3 / 1/8
Included in delivery:		1 Slide connector (M 5)			

Performance data relate to an air pressure of 6 bar (85 PSI) and lubricated air. With oil-free operation the output will be reduced by 10 - 20%.

Please note that these motor gears are not stall-proof. If a higher application-based torque cannot be limited by the customer (e.g. by use of a slip clutch), please contact our application specialists to discuss an alternative solution.

Optional Equipment		**for Motor size 0**
Flange incl. mounting screws	Part no.	4451872
Silencer: motor is reversible (right and left rotation)		
1 Silencer	Part no.	129588A
Maintenance unit with lubricator*	Part no.	820454A
Connection thread		G 1/4
Maintenance unit without lubricator*	Part no.	822408A
Connection thread		G 1/4
Replacement part set consisting of: vanes, sealant rings, o-rings and silencers	Part no.	446083B

*) Maintenance unit consists of pressure regulator valve, filter and optionally with or without lubricator

Motor size 0
Series 67X-
reversible, right rotation

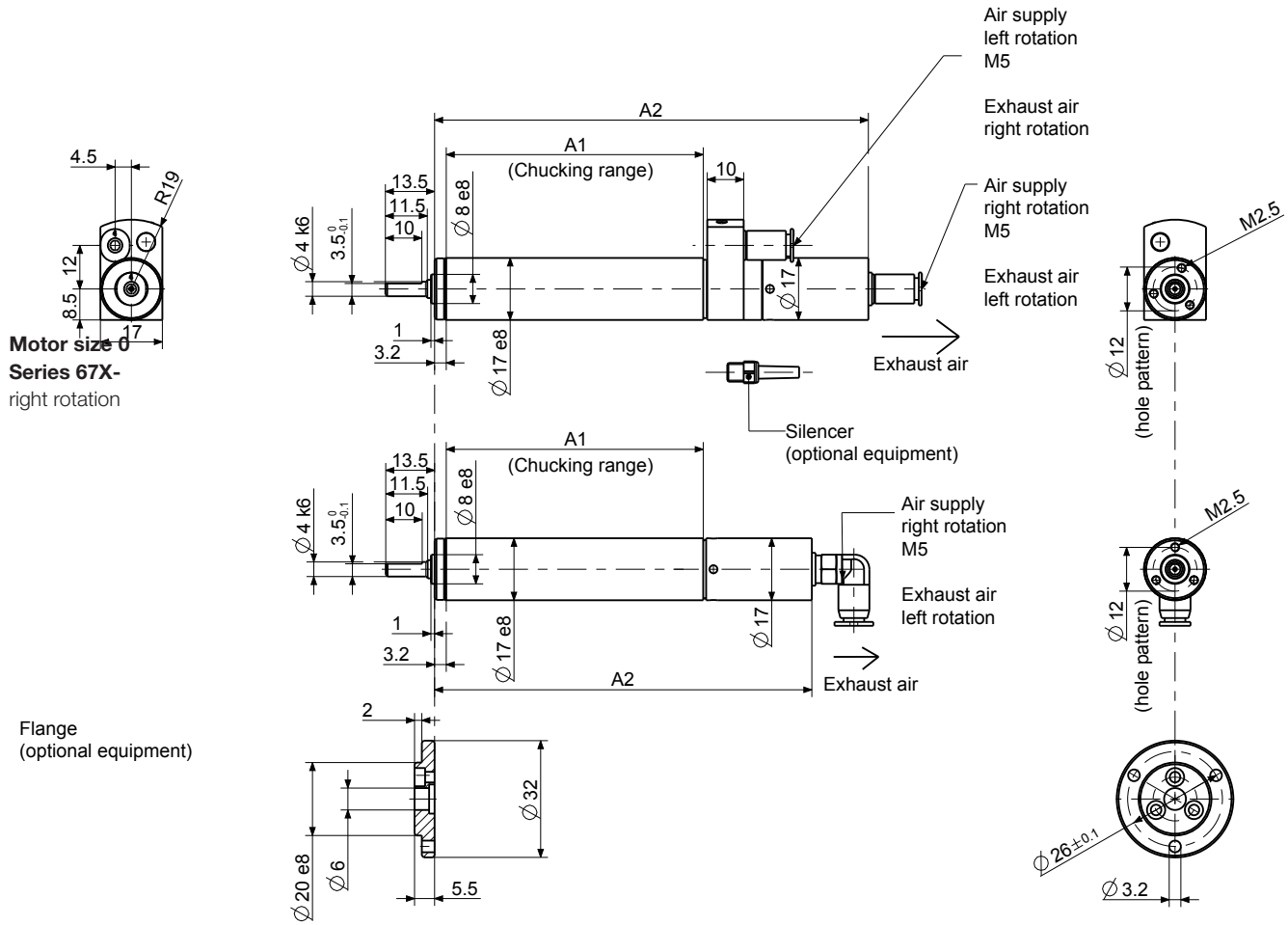

Dimensions in mm

p4400563

Motor size	Series 67X- Type		Dimensions of motor (mm)	
			A1	A2
0	67X-010	67X-020	64.5	112.9
	67X-030	67X-040	70.5	119
	67X-010R	67X-020R	64.5	97.4
	67X-030R	67X-040R	70.5	103.5

80/100 W ADVANCED LINE AIR MOTOR

Motor size 1						reversible				
Series 67X- (Ex) **Type**		**67X-001**	**67X-011**	**67X-021**	**67X-031**	**67X-061**	**67X-081**	**67X-331**	**67X-551**	**67X-581**
ATEX conform Part no.		306710A	306710B	306710C	306710D	306710H	306710E	306710G	306710F	306710I
ATEX specification		**A**	**C**	**C**	**A**	**A**	**A**	**A**	**A**	**A**
Nominal power	W/HP	80/0.11	80/0.11	80/0.11	80/0.11	80/0.11	80/0.11	80/0.11	80/0.11	80/0.11
Nominal speed	rpm	14500	3500	950	650	2)	2)	2)	2)	2)
Speed (idling)	rpm	29000	7000	1900	1300	490	240	60	30	8
Nominal torque	Nm/in.lbs	0.05/0.44	0.22/1.9	0.8/7	1.2/11	2/17.7 1)	2/17.7 1)	2/17.7 1)	2/17.7 1)	2/17.7 1)
Start torque min.	Nm/in.lbs	0.08/0.71	0.33/2.9	1.2/11	1.8/16	2/17.7 1)	2/17.7 1)	2/17.7 1)	2/17.7 1)	2/17.7 1)
Stall torque	Nm/in.lbs	0.10/0.89	0.41/3.63	1.5/13.28	2/17.7 1)	2/17.7 1)	2/17.7 1)	2/17.7 1)	2/17.7 1)	2/17.7 1)
Max. admissible torque	Nm/in.lbs	-	-	-	2/17.7	2/17.7	2/17.7	2/17.7	2/17.7	2/17.7
Air consumption	Nm^3/min/cfm	0.23/8	0.23/8	0.23/8	0.23/8	0.23/8	0.23/8	0.23/8	0.23/8	0.23/8
Length A2	mm/in.	96.5/3.76	96.5/3.76	105.5/4.1	105.5/4.1	113.5/4.4	113.5/4.4	122.5/4.78	122.5/4.78	130.5/5.09
Length A1	mm/in.	85/3.3	85/3.3	94/3.67	94/3.67	102/3.978	102/3.978	111/4.329	111/4.329	118,75/4.63
Weight	kg/lbs	0.2/0.4	0.2/0.4	0.22/0.5	0.22/0.5	0.29/0.6	0.29/0.6	0.31/0.68	0.31/0.68	0.33/0.73
Hose I.D., supply										
air/exhaust air	mm/in.	4/5/32	4/5/32	4/5/32	4/5/32	4/5/32	4/5/32	4/5/32	4/5/32	4/5/32

Motor size 1					right rotation
Series 67X- (Ex) **Type**		**67X-001R**	**67X-011R**	**67X-021R**	
ATEX conform Part no.		3067100A	3067100B	3067100C	
ATEX specification		**A**	**C**	**C**	
Nominal power	W/HP	100/0.134	100/0.134	100/0.134	
Nominal speed	rpm	15500	4300	1200	
Speed (idling)	rpm	31000	8600	2400	
Nominal torque	Nm/in.lbs	0.06/0.53	0.22/1.9	0.8/7	
Start torque min.	Nm/in.lbs	0.09/0.8	0.33/2.9	1.2/11	
Stall torque	Nm/in.lbs	0.11/0.97	0.41/3.63	1.5/13.28	
Max. admissible torque	Nm/in.lbs	-	-	-	
Air consumption	Nm^3/min/cfm	0.23/8	0.23/8	0.23/8	
Length A2	mm/in.	96.5/3.76	96.5/3.76	105.5/4.1	
Length A1	mm/in.	85/3.3	85/3.3	94/3.67	
Weight	kg/lbs	0.2/0.4	0.2/0.4	0.22/0.5	
Hose I.D., supply					
air/exhaust air	mm/in.	4/5/32	4/5/32	4/5/32	

Included in delivery: Slide connectors (M8 x 0.75)

Performance data relate to an air pressure of 6 bar (85 PSI) and lubricated air. With oil-free operation the output will be reduced by 10 - 20%.

1) Please take note of the maximum permissible torque for the gear. Please note that these motor gears are not stall-proof. If a higher application-based torque cannot be limited by the customer (e.g. by use of a slip clutch), please contact our application specialists to discuss an alternative solution.

2) At the maximum permissible torque of the gear, operating speed is adjusted to the region of the idle speed. This operating speed can be reduced to up to 25 % of the indicated idle speed by reducing pressure and additional exhaust air throttling. For operation at very low speeds in relation to the idle speed, we recommend the use of spring-assisted vanes (Z vanes).

Optional Equipment		for motor size 1
Flange incl. mounting screws	Part no.	4451812
Bracket incl. mounting screws	Part no.	4451802
Silencer	Part no.	117968A
Maintenance unit with lubricator*	Part no.	820454A
Connection thread		G 1/4
Maintenance unit without lubricator*	Part no.	822408A
Connection thread		G 1/4
Replacement part set consisting of:		446084B / for part no. 306710(0)A
vanes, sealant rings, o-rings and silencers	Part no.	446084C / for part no. 306710(0)B,C

*) Maintenance unit consists of pressure regulator valve, filter and optionally with or without lubricator

Motor size 1
Series 67X-
reversible, right rotation

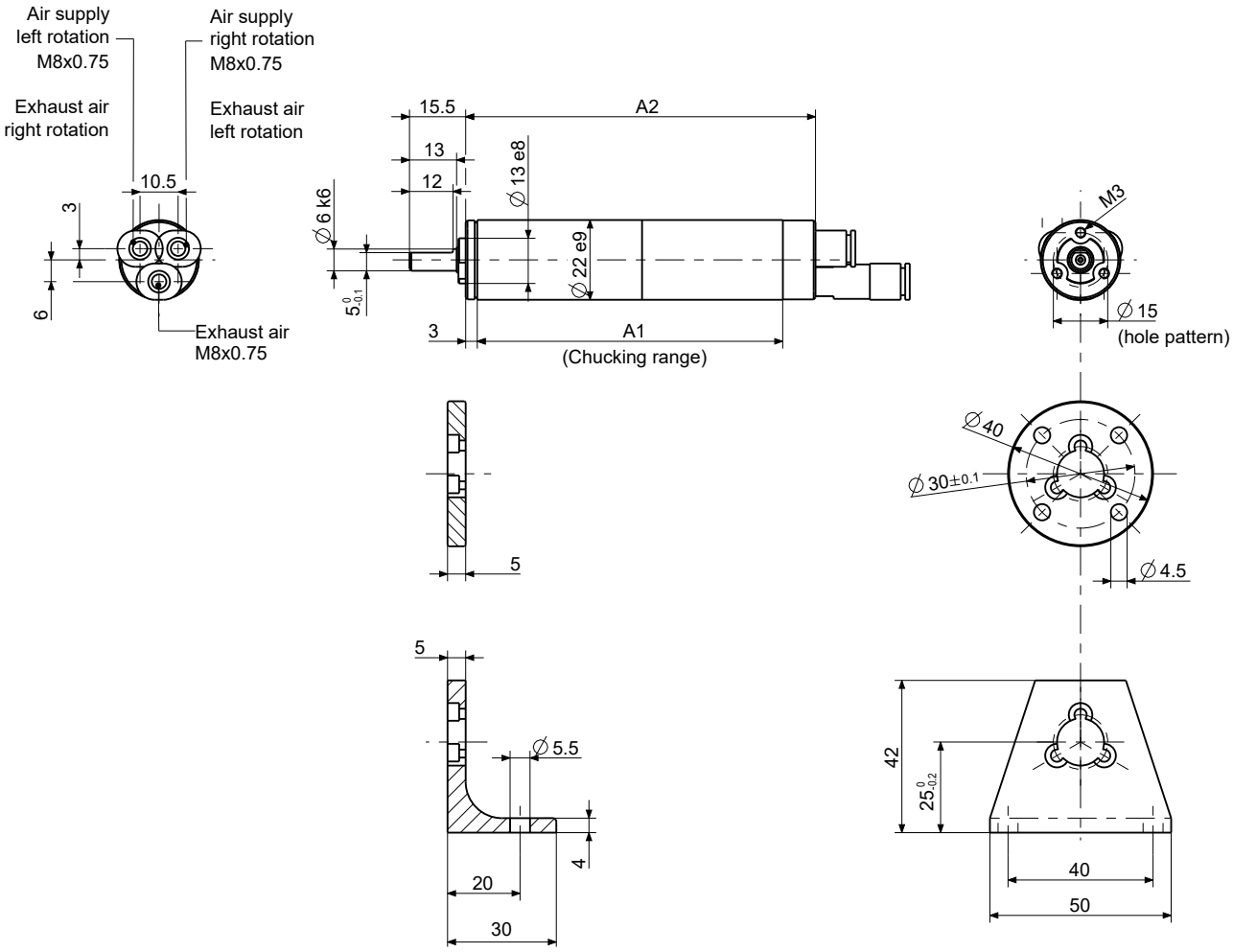

Dimensions in mm

p4400602

90/120/170 W ADVANCED LINE AIR MOTOR

Motor size 2		reversible						
Series 67X- ATEX conform	**Type** Part no.	**67X-002** 306720A	**67X-012** 306720H	**67X-022** 306720B	**67X-032** 306720C	**67X-042** 306720D	**67X-052** 306720E	**67X-2521** 306720F
ATEX specification		**A**	**C**	**C**	**C**	**A**	**A**	**A**
Series 67X- with threaded shaft ATEX conform	**Type** Part no.	**67X-002G** 3067207A	**67X-012G** 3067207H	**67X-022G** 3067207B	**67X-032G** 3067207C	**67X-042G** 3067207D	**67X-052G** 3067207E	**67X-2521G** 3067207F
ATEX specification		**A**	**C**	**C**	**C**	**A**	**A**	**A**
Nominal power	W / HP	120 / 0.16	120 / 0.16	120 / 0.16	120 / 0.16	120 / 0.16	120 / 0.16	90 / 0.12 [3]
Nominal speed	rpm	11000	2750	1800	700	450	300	[2]
Speed (idling)	rpm	22000	5500	3600	1400	900	600	100
Nominal torque	Nm / in.lbs	0.10 / 0.9	0.4 / 3.5	0.6 / 5.3	1.6 / 14	2.5 / 22	3.8 / 34	5/44 [1]
Start torque min.	Nm / in.lbs	0.15 / 1.3	0.6 / 5.3	0.9 / 8	2.4 / 21	3.8 / 34	5/44 [1]	5/44 [1]
Stall torque	Nm / in.lbs	0.19 / 1.68	0.76 / 6.73	1.14 / 10.09	3 / 26.55	4.7 / 41.6	5/44 [1]	5/44 [1]
Max. admissible torque	Nm / in.lbs	-	-	-	-	-	5 / 44	5 / 44
Air consumption	Nm^3/min/cfm	0.3 / 11	0.3 / 11	0.3 / 11	0.3 / 11	0.3 / 11	0.3 / 11	0.3 / 11
Weight	kg / lbs	0.35 / 0.8	0.35 / 0.8	0.35 / 0.8	0.4 / 0.9	0.4 / 0.9	0.4 / 0.9	0.45 / 1
Hose I.D., supply air/exhaust air	mm / in.	6 / ¼	6 / ¼	6 / ¼	6 / ¼	6 / ¼	6 / ¼	6 / ¼
Motor size 2		right rotation						
Series 67X- ATEX conform	**Type** Part no.	**67X-002R** 3067200A	**67X-012R** 3067200H	**67X-022R** 3067200B	**67X-032R** 3067200C	**67X-042R** 3067200D	**67X-052R** 3067200E	
ATEX specification		**A**	**D**	**C**	**C**	**C**	**A**	
Nominal power	W / HP	170 / 0.23	170 / 0.23	170 / 0.23	170 / 0.23	170 / 0.23	170 / 0.23	
Nominal speed	rpm	12250	3075	2050	750	500	340	
Speed (idling)	rpm	24500	6150	4100	1500	1000	680	
Nominal torque	Nm / in.lbs	0.13 / 1.15	0.5 / 4.42	0.8 / 7.08	2.1 / 18.6	3.2 / 28.3	4.8 / 42.5	
Start torque min.	Nm / in.lbs	0.2 / 1.77	0.8 / 7.08	1.2 / 10.62	3.2 / 28.3	4.8 / 42.5	5/44 [1]	
Stall torque	Nm / in.lbs	0.25 / 2.2	1 / 8.85	1.5 / 13.3	4.1 / 36.3	5/44 [1]	5/44 [1]	
Max. admissible torque	Nm / in.lbs	-	-	-	-	5 / 44	5 / 44	
Air consumption	Nm^3/min/cfm	0.3 / 11	0.3 / 11	0.3 / 11	0.3 / 11	0.3 / 11	0.3 / 11	
Weight	kg / lbs	0.35 / 0.8	0.35 / 0.8	0.35 / 0.8	0.4 / 0.9	0.4 / 0.9	0.4 / 0.9	
Hose I.D., supply air/exhaust air	mm / in.	6 / ¼	6 / ¼	6 / ¼	6 / ¼	6 / ¼	6 / ¼	

Performance data relate to an air pressure of 6 bar (85 PSI) and lubricated air. With oil-free operation the output will be reduced by 10 - 20%. [3] theoretical values for issuing the power diagram

[1] Please take note of the maximum permissible torque for the gear. Please note that these motor gears are not stall-proof. If a higher application-based torque cannot be limited by the customer (e.g. by use of a slip clutch), please contact our application specialists to discuss an alternative solution.

[2] At the maximum permissible torque of the gear, operating speed is adjusted to the region of the idle speed. This operating speed can be reduced to up to 25 % of the indicated idle speed by reducing pressure and additional exhaust air throttling. For operation at very low speeds in relation to the idle speed, we recommend the use of spring-assisted vanes (Z vanes).

Optional Equipment		**for motor size 2**
Flange incl. mounting screws	Part no.	4445694
Bracket incl. mounting screws	Part no.	4445722
Silencer: motor operates in one direction (right or left rotation)		
1 Hose nozzle	Part no.	823237
1 Silencer	Part no.	129596A
Silencer: motor is reversible (right and left rotation)		
2 Hose nozzles	Part no.	823237
1 Silencer	Part no.	129596B
Maintenance unit with lubricator*	Part no.	820454A
Connection thread		G 1/4
Maintenance unit without lubricator*	Part no.	822408A
Connection thread		G 1/4
Replacement part set consisting of:		445580C / for part no. 306720(0)A
vanes, sealant rings, o-rings and silencers	Part no.	445580A / for part no. 306720(0)B-H

*) Maintenance unit consists of pressure regulator valve, filter and optionally with or without lubricator

Motor size 2
Series 67X-
reversible and right rotation

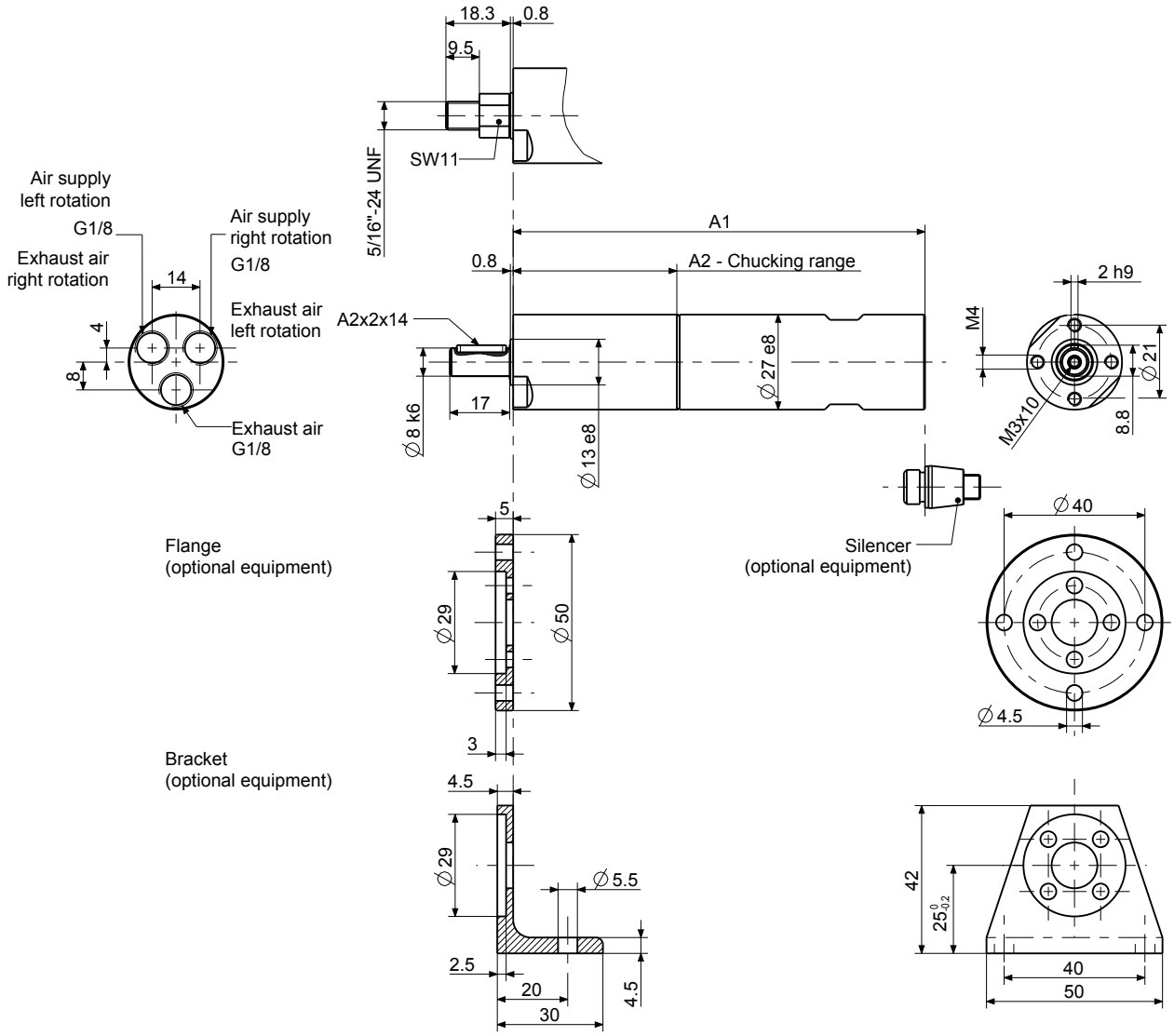

Dimensions in mm

p4402205

Motor size	Series 67X- Type			Dimensions of motor (mm)	
				A1	A2
2	67X-002(G,R)	67X-012(G,R)	67X-022(G,R)	117	46.5
	67X-032(G,R)	67X-042(G,R)	67X-052(G,R)	129.5	59
	67X-2521(G)			142	71.5

100/200/280 W ADVANCED LINE AIR MOTOR

Motor size 2.5			reversible							
Series 67X- ATEX conform		**Type** Part no.	**67X-0025** 306725B	**67X-0125** 306725C	**67X-0225** 306725D	**67X-0725** 306725F	**67X-0325** 306725E	**67X-0425** 306725A	**67X-04251** 306725G	**67X-24251** 306725H
ATEX specification			**A**	**C**	**C**	**C**	**A**	**A**	**A**	**A**
Series 67X- with threaded shaft ATEX conform		**Type** Part no.	**67X-0025G** 3067257B	**67X-0125G** 3067257C	**67X-0225G** 3067257D	**67X-0725G** 3067257F	**67X-0325G** 3067257E	**67X-0425G** 3067257A	**67X-04251G** 3067257G	**67X-24251G** 3067257H
ATEX specification			**A**	**C**	**C**	**C**	**A**	**A**	**A**	**A**
Nominal power	W / HP		200 / 0.27	200 / 0.27	200 / 0.27	200 / 0.27	200 / 0.27	200 / 0.27	100 / 0.13	200 / 0.27
Nominal speed	rpm		8000	2300	1200	700	350	180	90	2)
Speed (idling)	rpm		16000	4600	2400	1400	700	360	180	50
Nominal torque	Nm / in.lbs		0.24/2.12	0.8/7.08	1.6/14.16	2.7/23.9	5.4/47.8	10.6/93.81	10.5/92.9	20/177 1)
Start torque min.	Nm / in.lbs		0.35/3.1	1.2/10.62	2.4/21.24	4.1/36.3	8.2/72.6	15.9/140.7	15/132.75	20/177 1)
Stall torque	Nm / in.lbs		0.45/3.98	1.5/13.3	3/26.6	5.1/45.1	10.3/91.2	20/177 1)	20/177 1)	20/177 1)
Max. admissible torque	Nm / in.lbs		-	-	-	-	-	20/177	20/177	20/177
Air consumption	Nm^3/min/cfm		0.37/13.06	0.37/13.06	0.37/13.06	0.37/13.06	0.37/13.06	0.37/13.06	0.27/9.53	0.37/13.06
Weight	kg / lbs		0.7/1.54	0.75/1.65	0.75/1.65	0.85/1.87	0.85/1.87	0.85/1.87	0.85/1.87	0.95/2.09
Hose I.D., supply air/exhaust air	mm /in.		10 / 3/8	10 / 3/8	10 / 3/8	10 / 3/8	10 / 3/8	10 / 3/8	10 / 3/8	10 / 3/8

Motor size 2.5			right rotation					
Series 67X- ATEX conform		**Type** Part no.	**67X-0025R** 3067250B	**67X-0125R** 3067250C	**67X-0225R** 3067250D	**67X-0725R** 3067250F	**67X-0325R** 3067250E	**67X-0425R** 3067250A
ATEX specification			**A**	**C**	**C**	**C**	**A**	**A**
Nominal power	W / HP		280 / 0.38	280 / 0.38	280 / 0.38	280 / 0.38	280 / 0.38	280 / 0.38
Nominal speed	rpm		9000	2600	1350	750	395	200
Speed (idling)	rpm		18000	5200	2700	1500	790	400
Nominal torque	Nm / in.lbs		0.3 / 2.65	1.03 / 9.11	1.98 / 17.5	3.55 / 31.4	6.77 / 59.9	13.37/118.3
Start torque min.	Nm / in.lbs		0.45 / 3.98	1.5 / 13.3	2.9 / 25.7	5.3 / 46.9	10.1 / 89.4	20 / 177
Stall torque	Nm / in.lbs		0.55 / 4.9	1.95 / 17.3	3.7 / 32.7	6.7 / 59.3	12.8 / 113.3	20/177 1)
Max. admissible torque	Nm / in.lbs		-	-	-	-	-	20/177
Air consumption	Nm^3/min/cfm		0.4/14.12	0.4/14.12	0.4/14.12	0.4/14.12	0.4/14.12	0.4/14.12
Weight	kg / lbs		0.7/1.54	0.75/1.65	0.75/1.65	0.85/1.87	0.85/1.87	0.85/1.87
Hose I.D., supply air/exhaust air	mm /in.		10 / 3/8	10 / 3/8	10 / 3/8	10 / 3/8	10 / 3/8	10 / 3/8

Performance data relate to an air pressure of 6 bar (85 PSI) and lubricated air. With oil-free operation the output will be reduced by 10 - 20%.

1) Please take note of the maximum permissible torque for the gear. Please note that these motor gears are not stall-proof. If a higher application-based torque cannot be limited by the customer (e.g. by use of a slip clutch), please contact our application specialists to discuss an alternative solution.

2) At the maximum permissible torque of the gear, operating speed is adjusted to the region of the idle speed. This operating speed can be reduced to up to 25 % of the indicated idle speed by reducing pressure and additional exhaust air throttling. For operation at very low speeds in relation to the idle speed, we recommend the use of spring-assisted vanes (Z vanes).

Optional Equipment		**for motor size 2.5**
Flange incl. mounting screws	Part no.	4445305
Bracket incl. mounting screws	Part no.	4445393
Silencer: motor operates in one direction (right or left rotation)		
1 Hose nozzle	Part no.	823238 (1/8")
1 Silencer	Part no.	129601A (G1/8 / G1/4)
Silencer: motor is reversible (right or left rotation)		
2 Hose nozzles	Part no.	823238 (1/8")
1 Silencer	Part no.	129601B (G1/4)
Maintenance unit with lubricator*	Part no.	820454A
Connection thread		G 1/4
Maintenance unit without lubricator*	Part no.	822408A
Connection thread		G 1/4
Replacement part set consisting of: vanes, sealant rings, o-rings and silencers	Part no.	444785A / for part no. 306725(0)A, C-H 444785E / for part no. 306725(0)B

*) Maintenance unit consists of pressure regulator valve, filter and optionally with or without lubricator

Motor size 2.5
Series 67X-
reversible and right rotation

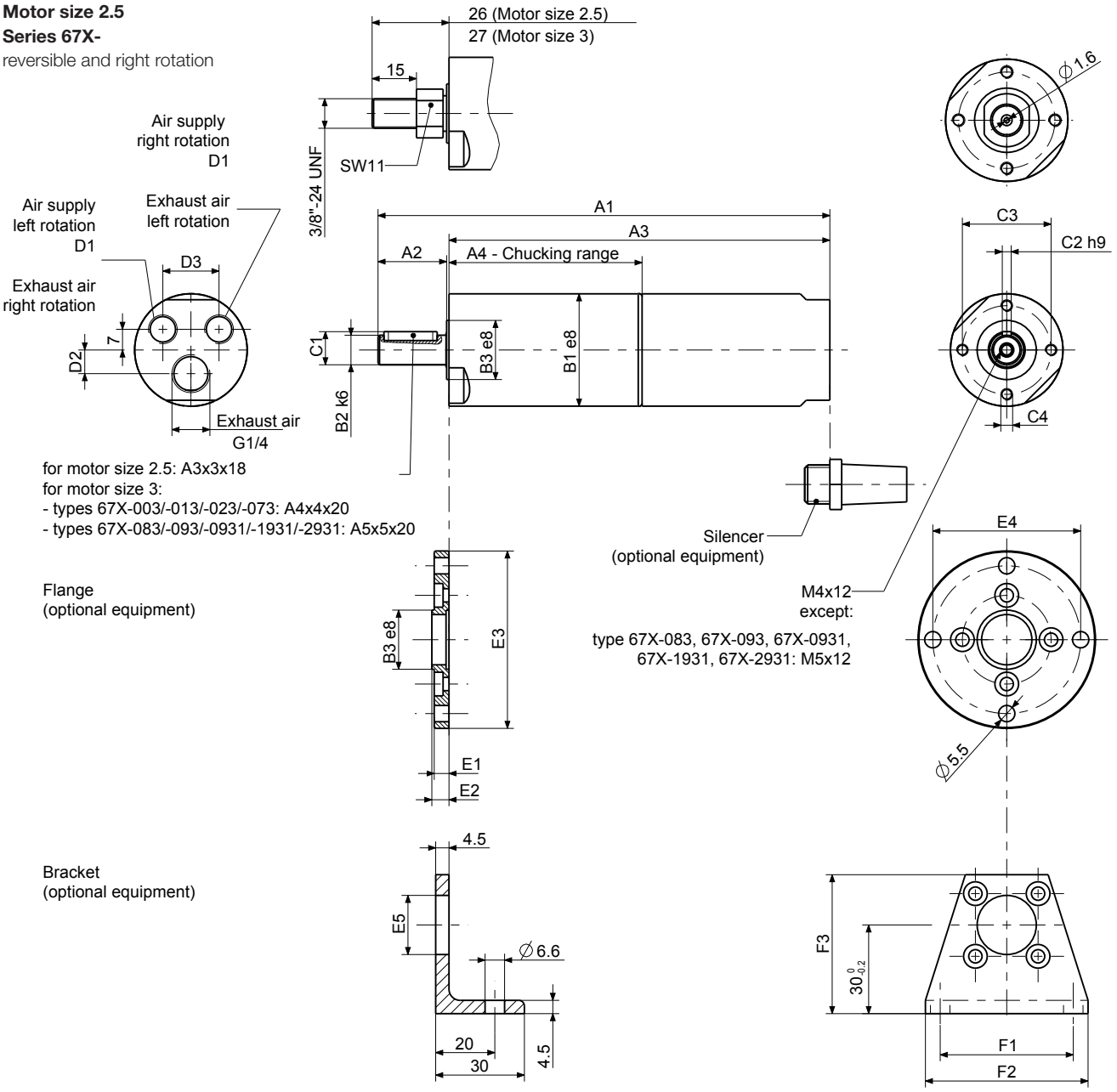

Dimensions in mm

p4402777

Motor size	Series 67X- Type				Dimensions of motor (mm)												
					A1	A2	A3	A4	B1	B2	B3	C1	C2	C3	C4	D1	D2	D3
2.5	67X-0025(G,R)	67X-0125(G,R)	67X-0225(G,R)		152.5	23	128.5	65	38	10	20	11.2	3	30	M4	G1/8	8	19
	67X-0725(G,R)	67X-0325(G,R)	67X-0425(G,R)	67X-04251(G)	168.8		144.8	81.3										
	67X-24251(G)				184.5		160.5	97										

Motor size	Series 67X- Type				Dimensions of flange (mm)						Dimensions of bracket (mm)		
					B3	E1	E2	E3	E4	E5	F1	F2	F3
2.5	67X-0025(G,R)	67X-0125(G,R)	67X-0225(G,R)	67X-0325(G,R)	20	5	5.8	60	50	17	45	55	47
	67X-0725(G,R)	67X-0425(G,R)	67X-04251(G)	67X-24251(G)									

130/300/400 W ADVANCED LINE AIR MOTOR

Motor size 3		reversible								
Series 67X- ATEX conform **ATEX specification**	**Type** Part no.	**67X-003** 306730A **A**	**67X-013** 306730B **D**	**67X-023** 306730C **C**	**67X-073** 306730D **C**	**67X-083** 306730E **A**	**67X-093** 306730F **A**	**67X-0931** 306730G **A**	**67X-1931** 306730K **A**	**67X-2931** 306730H **A**
Series 67X- with threaded shaft ATEX conform **ATEX specification**	**Type** Part no.	**67X-003G** 3067307A **A**	**67X-013G** 3067307B **D**	**67X-023G** 3067307C **C**	**67X-073G** 3067307D **C**	**67X-083G** 3067307E **A**	**67X-093G** 3067307F **A**	**67X-0931G** 3067307G **A**	**67X-1931G** 3067307K **A**	**67X-2931G** 3067307H **A**
Nominal power	W / HP	300 / 0.4	300 / 0.4	300 / 0.4	300 / 0.4	300 / 0.4	300 / 0.4	130 / 0.17	300 / 0.4	300 / 0.4
Nominal speed	rpm	7250	2300	1200	615	350	180	90	2)	2)
Speed (idling)	rpm	14500	4600	2400	1230	700	360	180	100	50
Nominal torque	Nm / in.lbs	0.4/3.54	1.2/10.62	2.4/21.24	4.65/41.15	8.15/72.13	15.9/140.7	13.8/122.13	36/318.6 1)	36/318.6 1)
Start torque min.	Nm / in.lbs	0.6/5.31	1.9/16.8	3.6/31.9	6.95/61.5	12.25/108.4	23.8/210.6	21/185.85	36/318.6 1)	36/318.6 1)
Stall torque	Nm / in.lbs	0.76/6.7	2.2/19.5	4.5/39.8	8.8/77.88	15.5/137.2	30.2/267.3	26.2/231.9	36/318.6 1)	36/318.6 1)
Max. admissible torque	Nm / in.lbs	-	-	-	-	-	-	-	36/318.6	36/318.6
Air consumption	Nm^3/min/cfm	0.47/16.6	0.47/16.6	0.47/16.6	0.47/16.6	0.47/16.6	0.47/16.6	0.28/9.88	0.47/16.6	0.47/16.6
Weight	kg / lbs	1.0/2.2	1.05/2.31	1.05/2.31	1.10/2.42	1.15/2.53	1.15/2.53	1.15/2.53	1.25/2.75	1.25/2.75
Hose I.D., supply air/exhaust air	mm / in.	10 / 3/8	10 / 3/8	10 / 3/8	10 / 3/8	10 / 3/8	10 / 3/8	10 / 3/8	10 / 3/8	10 / 3/8

Motor size 3		right rotation					
Series 67X- ATEX conform **ATEX specification**	**Type** Part no.	**67X-003R** 3067300A **A**	**67X-013R** 3067300B **D**	**67X-023R** 3067300C **C**	**67X-073R** 3067300D **C**	**67X-083R** 3067300E **A**	**67X-093R** 3067300F **A**
Series 67X- with threaded shaft ATEX conform **ATEX specification**	**Type** Part no.	**67X-003GR** 30673014A **A**	**67X-013GR** 30673014B **D**	**67X-023GR** 30673014C **C**	**67X-073GR** 30673014D **C**	**67X-083GR** 30673014E **A**	**67X-093GR** 30673014F **A**
Nominal power	W / HP	400/0.54	400/0.54	400/0.54	400/0.54	400/0.54	400/0.54
Nominal speed	rpm	8800	2550	1300	745	425	220
Speed (idling)	rpm	17600	5100	2600	1490	850	440
Nominal torque	Nm / in.lbs	0.43/3.8	1.5/13.3	2.9/18.6	5.1/45.1	9/79.65	17.4/154
Start torque min.	Nm / in.lbs	0.65/5.75	2.2/19.5	4.4/38.9	7.65/67.7	13.4/118.6	26/230.1
Stall torque	Nm / in.lbs	0.82/7.3	2.8/24.8	5.5/48.7	9.7/85.8	17/150.45	33/292.05
Max. admissible torque	Nm / in.lbs	-	-	-	-	-	-
Air consumption	Nm^3/min/cfm	0.5/17.65	0.5/17.65	0.5/17.65	0.5/17.65	0.5/17.65	0.5/17.65
Weight	kg / lbs	1.0/2.2	1.05/2.31	1.05/2.31	1.10/2.42	1.15/2.53	1.15/2.53
Hose I.D., supply air/exhaust air	mm / in.	10 / 3/8	10 / 3/8	10 / 3/8	10 / 3/8	10 / 3/8	10 / 3/8

Performance data relate to an air pressure of 6 bar (85 PSI) and lubricated air. With oil-free operation the output will be reduced by 10 - 20%.

1) Please take note of the maximum permissible torque for the gear. Please note that these motor gears are not stall-proof. If a higher application-based torque cannot be limited by the customer (e.g. by use of a slip clutch), please contact our application specialists to discuss an alternative solution.

2) At the maximum permissible torque of the gear, operating speed is adjusted to the region of the idle speed. This operating speed can be reduced to up to 25 % of the indicated idle speed by reducing pressure and additional exhaust air throttling. For operation at very low speeds in relation to the idle speed, we recommend the use of spring-assisted vanes (Z vanes).

Optional Equipment		**for motor size 3**
Flange incl. mounting screws	Part no.	4446105
Bracket incl. mounting screws	Part no.	4446112
Silencer: motor operates in one direction (right or left rotation)		
1 Hose nozzle	Part no.	410541 (1/4")
1 Silencer	Part no.	129602A (2xG1/4)
Silencer: motor is reversible (right or left rotation)		
2 Hose nozzles	Part no.	410541 (1/4")
1 Silencer	Part no.	129601B (G1/4)
Maintenance unit with lubricator*	Part no.	820455A
Connection thread		G 1/2
Maintenance unit without lubricator*	Part no.	822409A
Connection thread		G 1/2
Replacement part set consisting of: vanes, sealant rings, o-rings and silencers	Part no.	444786A / for part no. 306730(0)B-K 444786L / for part no. 306730(0)A

*) Maintenance unit consists of pressure regulator valve, filter and optionally with or without lubricator

Motor size 3
Series 67X-
reversible and right rotation

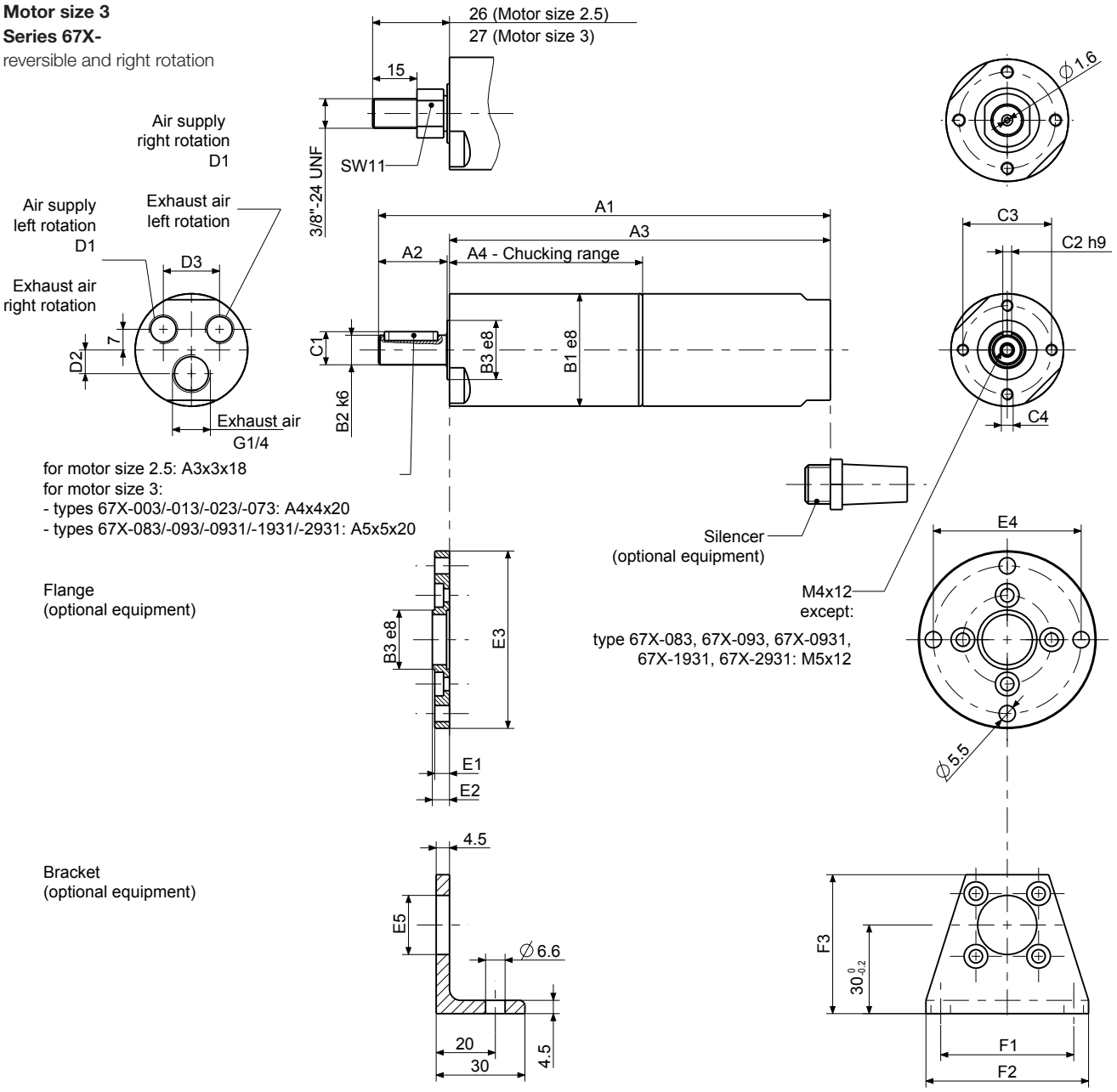

Dimensions in mm

p4402777

Motor size	Series 67X- Type			Dimensions of motor (mm)													
				A1	A2	A3	A4	B1	B2	B3	C1	C2	C3	C4	D1	D2	D3
3	67X-003(G,R)	67X-013(G,R)	67X-023(G,R)	171	27	143	66	42	12	24	13.5	4	34	M5	G1/4	11	20
	67X-073(G,R)			187		159	83										
	67X-083(G,R)	67X-093(G,R)	67X-0931(G,R)	191	30				14		16	5					
	67X-1931(G)	67X-2931(G)		196		164											

Motor size	Series 67X- Type			Dimensions of flange (mm)						Dimensions of bracket (mm)		
				B3	E1	E2	E3	E4	E5	F1	F2	F3
3	67X-003(G,R)	67X-013(G,R)	67X-023(G,R)	24	6	6.8	65	55	21	50	60	48
	67X-073(G,R)	67X-083(G,R)	67X-093(G,R)									
	67X-0931(G)	67X-1931(G)	67X-2931(G)									

300/400 W ADVANCED LINE AIR MOTOR with high torque

Motor size 3 with high torque		reversible				
Series 67- ATEX conform	**Type** Part no.	**67X-613** 306730I	**67X-623** 306730L	**67X-673** 306730M	**67X-413** 306730N	**67X-423** 306730O
ATEX specification		**A**	**A**	**A**	**A**	**A**
Nominal power	W / HP	300 / 0.4	300 / 0.4	300 / 0.4	300 / 0.4	300 / 0.4
Nominal speed	rpm	85	45	25	13	7
Speed (idling)	rpm	170	90	50	26	14
Nominal torque	Nm / in.lbs	33.7 / 298.2	63.6 / 562.9	114.5 / 1013.3	220 / 1947	410 / 3628.5
Start torque min.	Nm / in.lbs	50.5 / 446.9	95.4 / 844.3	171.5 / 1517.8	330 / 2920.5	600/5310 [1]
Stall torque	Nm / in.lbs	64 / 566.4	120.9 / 1070	217 / 1920.45	418 / 3699.3	600/5310 [1]
Max. admissible torque	Nm / in.lbs	-	-	-	-	600 / 5310
Air consumption	Nm^3/min/cfm	0.47 / 16.6	0.47 / 16.6	0.47 / 16.6	0.47 / 16.6	0.47 / 16.6
Weight	kg / lbs	2.7 / 5.94	2.6 / 5.72	2.9 / 6.38	3.5 / 7.7	3.5 / 7.7
Hose I.D., supply air/exhaust air	mm / in.	10 / 3/8	10 / 3/8	10 / 3/8	10 / 3/8	10 / 3/8
Motor size 3 with high torque		right rotation				
Series 67- ATEX conform	**Type** Part no.	**67X-613R** 3067300I	**67X-623R** 3067300L	**67X-673R** 3067300M	**67X-413R** 3067300N	**67X-423R** 3067300O
ATEX specification		**A**	**A**	**A**	**A**	**A**
Nominal power	W / HP	400/0.54	400/0.54	400/0.54	400/0.54	400/0.54
Nominal speed	rpm	105	55	31	15	8
Speed (idling)	rpm	210	110	62	30	16
Nominal torque	Nm / in.lbs	36.3/321.25	69.4/614.2	123.2/1090	254/2248	477/4221.45
Start torque min.	Nm / in.lbs	54.5/482.3	104/920.4	184.4/1631.94	382/3380.7	600/5310 [1]
Stall torque	Nm / in.lbs	69/610.65	132/1168.2	234/2070.9	483.8/4281.63	600/5310 [1]
Max. admissible torque	Nm / in.lbs	-	-	-	-	600/5310
Air consumption	Nm^3/min/cfm	0.5/17.65	0.5/17.65	0.5/17.65	0.5/17.65	0.5/17.65
Weight	kg / lbs	2.7 / 5.94	2.6 / 5.72	2.9 / 6.38	3.5 / 7.7	3.5 / 7.7
Hose I.D., supply air/exhaust air	mm / in.	10 / 3/8	10 / 3/8	10 / 3/8	10 / 3/8	10 / 3/8

Performance data relate to an air pressure of 6 bar (85 PSI) and lubricated air. With oil-free operation the output will be reduced by 10 - 20%.

1) Please take note of the maximum permissible torque for the gear. Please note that these motor gears are not stall-proof. If a higher application-based torque cannot be limited by the customer (e.g. by use of a slip clutch), please contact our application specialists to discuss an alternative solution.

Optional Equipment

		for motor size 3
Flange incl. mounting screws	Part no.	4134632
Bracket incl. mounting screws	Part no.	44461738
Silencer: motor operates in one direction (right or left rotation)		
1 Hose nozzle	Part no.	410541 (1/4")
1 Silencer	Part no.	129602A (2xG1/4)
Silencer: motor is reversible (right or left rotation)		
2 Hose nozzles	Part no.	410541 (1/4")
1 Silencer	Part no.	129601B (G1/4)
Maintenance unit with lubricator*	Part no.	820455A
Connection thread		G 1/2
Maintenance unit without lubricator*	Part no.	822409A
Connection thread		G 1/2
Replacement part set consisting of:		444786O for part no. 306730(0)I,L,M
vanes, sealant rings, o-rings and silencers	Part no.	444786C for part no. 306730(0)N,O

*) Maintenance unit consists of pressure regulator valve, filter and optionally with or without lubricator

Motor size 3 High torque stainless steel motors
Series 67(X)-
reversible
right rotation

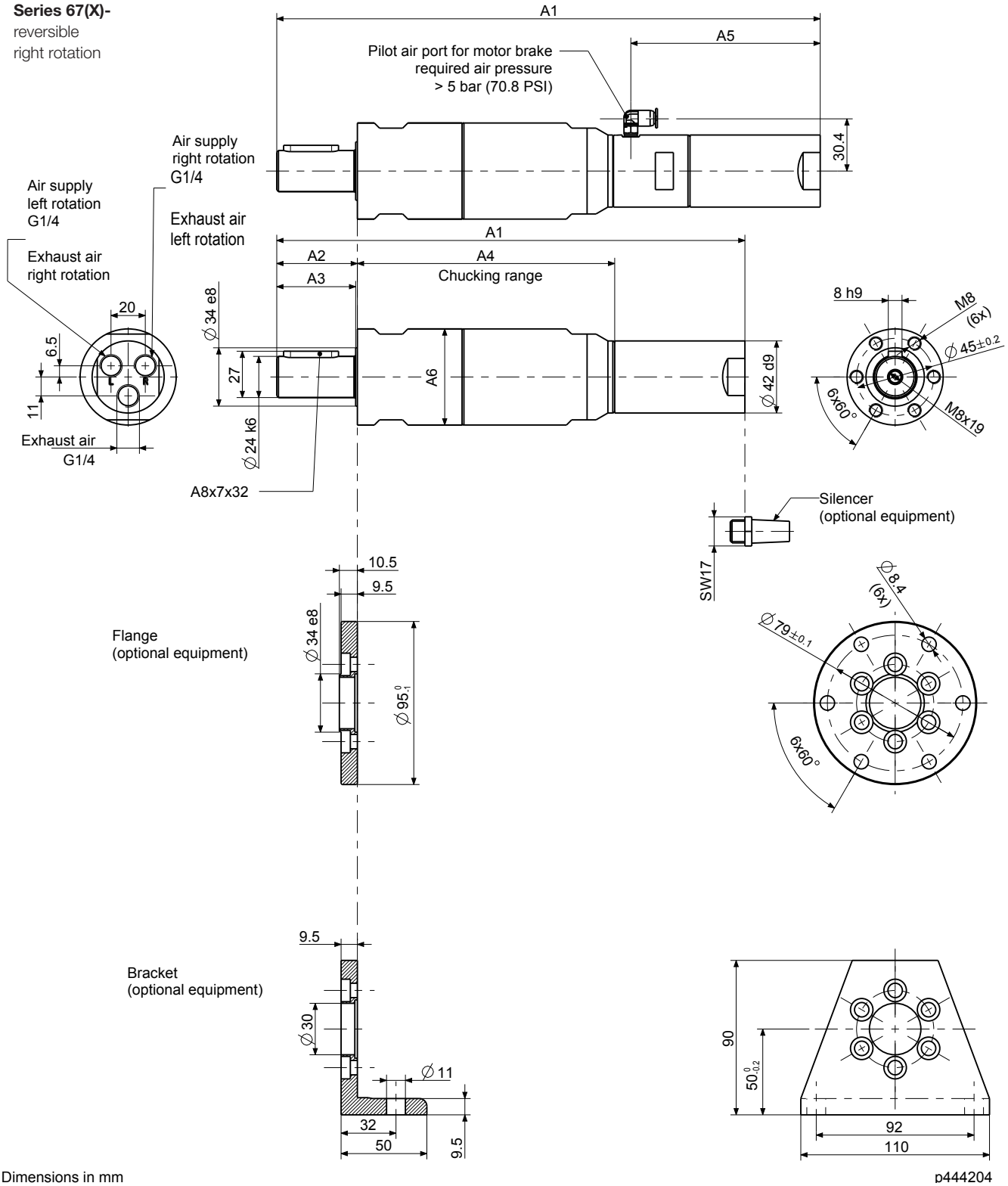

Dimensions in mm

p444204

Motor size	Series 67(X)- Type		Dimensions of motor (mm)					
			A1	A2	A3	A4	A5	A6
3	67X-613(R)	67X-623(R)	257.1	44	43	134.1	-	56e8
	67X-673(R)		272.9			149.9		
	67X-413(R)	67X-423(R)	279.2	47	46	156.2		63h8

300 W ADVANCED LINE HIGH TORQUE MOTORS with integrated holding brake

Motor size 3 with holding brake		reversible				
Series 67- ATEX conform	**Type** Part no.	**67X-613B** 1030291P	**67X-623B** 1030291R	**67X-673B** 1030291S	**67X-413B** 1030291N	**67X-423B** 1030291O
ATEX specification		**A**	**A**	**A**	**A**	**A**
Series 67- without ATEX authorization	**Type** Part no.	**67-613B-1** 103029P	**67-623B-1** 103029R	**67-673B-1** 103029S	**67-413B-1** 103029N	**67-423B-1** 103029O
Nominal power	W / HP	300 / 0.4	300 / 0.4	300 / 0.4	300 / 0.4	300 / 0.4
Nominal speed	rpm	85	45	25	13	7
Speed (idling)	rpm	170	90	50	26	14
Nominal torque	Nm / in.lbs	33.7 / 298.2	63.6 / 562.9	114.5 / 1013.3	220 / 1947	410 / 3628.5
Start torque min.	Nm / in.lbs	50.5 / 446.9	95.4 / 844.29	171.5 / 1517.8	330 / 2920.5	600/5310 [1]
Stall torque	Nm / in.lbs	64 / 566.4	120.9 / 1070	217 / 1920.45	418 / 3699.3	600/5310 [1]
Max. admissible torque	Nm / in.lbs	-	-	-	-	600 / 5310
Brake torque	Nm / in.lbs	82 / 725.7	160 / 1416	282 / 2495.7	554 / 4902.9	-
Air consumption	Nm^3/min/cfm	0.47 / 16.6	0.47 / 16.6	0.47 / 16.6	0.47 / 16.6	0.47 / 16.6
Weight	kg / lbs	3.1 / 6.82	3 / 6.6	3.3 / 7.26	3.9 / 8.58	3.9 / 8.58
Hose I.D., supply air/exhaust air	mm / in.	10 / 3/8	10 / 3/8	10 / 3/8	10 / 3/8	10 / 3/8

Performance data relate to an air pressure of 6 bar (85 PSI) and lubricated air. With oil-free operation the output will be reduced by 10 - 20%.

1) Please take note of the maximum permissible torque for the gear. Please note that these motor gears are not stall-proof. If a higher application-based torque cannot be limited by the customer (e.g. by use of a slip clutch), please contact our application specialists to discuss an alternative solution.

Optional Equipment		**for motor size 3**
Flange incl. mounting screws	Part no.	4134632
Bracket incl. mounting screws	Part no.	44461738
Silencer: motor operates in one direction (right or left rotation)		
1 Hose nozzle	Part no.	410541 (1/4")
1 Silencer	Part no.	129602A (2xG1/4)
Silencer: motor is reversible (right or left rotation)		
2 Hose nozzles	Part no.	410541 (1/4")
1 Silencer	Part no.	129601B (G1/4)
Maintenance unit with lubricator*	Part no.	820455A
Connection thread		G 1/2
Maintenance unit without lubricator*	Part no.	822409A
Connection thread		G 1/2
Replacement part set consisting of: vanes, sealant rings, o-rings and silencers	Part no.	444786O for part no. 103029(1)P,R,S 444786C for part no. 103029(1)N,O
Replacement part set for brake consisting of: discs, pressure spring and o-rings	Part no.	446096C

*) Maintenance unit consists of pressure regulator valve, filter and optionally with or without lubricator

Motor size 3 High torque stainless steel motors
Series 67(X)-
reversible

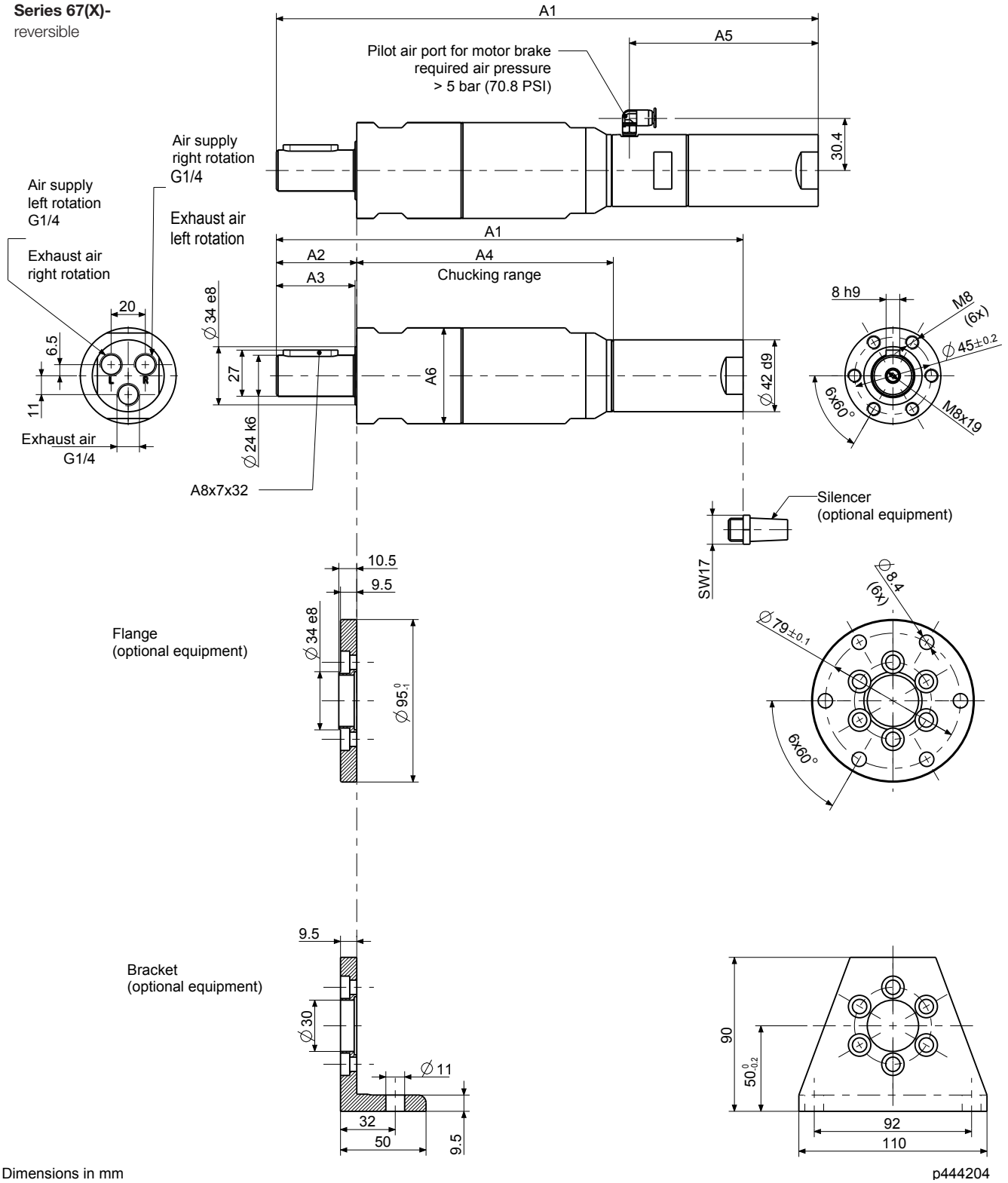

Dimensions in mm

p444204

Motor size	Series 67(X)- Type		Dimensions of motor (mm)					
			A1	A2	A3	A4	A5	A6
3	67(X)-613B(-1)	67(X)-623B(-1)	300.1	44	43	134.1	110.4	56e8
	67(X)-673B(-1)		316.8			149.9		
	67(X)-413B(-1)	67(X)-423B(-1)	316.8	47	46	156.2		63h8

100/130/200/300 W ADVANCED LINE AIR MOTOR with integrated holding brake

Motor size 2.5 with holding brake		reversible							
Series 67- ATEX conform	**Type** Part no.	**67X-0025B** 1073991B	**67X-0125B** 1073991C	**67X-0225B** 1073991D	**67X-0725B** 1073991F	**67X-0325B** 1073991E	**67X-0425B** 1073991A	**67X-04251B** 1073991G	**67X-24251B** 1073991H
ATEX specification		**A**	**C**	**C**	**C**	**A**	**A**	**A**	**A**
Series 67- without ATEX authorization	**Type** Part no.	**67-0025B-1** 107399B	**67-0125B-1** 107399C	**67-0225B-1** 107399D	**67-0725B-1** 107399F	**67-0325B-1** 107399E	**67-0425B-1** 107399A	**67-04251B-1** 107399G	**67-24251B-1** 107399H
Nominal power	W/HP	200/0.27	200/0.27	200/0.27	200/0.27	200/0.27	200/0.27	100/0.134	200/0.27
Nominal speed	rpm	8000	2300	1200	700	350	180	90	2)
Speed (idling)	rpm	16000	4600	2400	1400	700	360	180	50
Nominal torque	Nm/in.lbs	0.24/2.12	0.8/7.08	1.6/14.16	2.7/23.9	5.4/47.8	10.6/93.8	10.5/92.9	20/177 1)
Start torque min.	Nm/in.lbs	0.35/3.1	1.2/10.6	2.4/21.2	4.1/36.3	8.2/72.6	15.9/140.7	15/132.75	20/1177 1)
Stall torque	Nm/in.lbs	0.45/3.98	1.5/13.275	3/26.55	5.1/45.135	10.3/91.155	-	-	20/177 1)
Max. admissible torque	Nm/in.lbs	-	-	-	-	20/177	20/177	20/177	20/177
Brake torque	Nm/in.lbs	1/8.85	3.4/30.1	6.7/59.3	11.8/104.43	-	-	-	-
Air consumption	Nm^3/min/cfm	0.37/13.06	0.37/13.06	0.37/13.06	0.37/13.06	0.37/13.06	0.37/13.06	0.27/9.53	0.37/13.06
Weight	kg/lbs	1/2.2	1.05/2.31	1.05/2.31	1.15/2.53	1.15/2.53	1.15/2.53	1.36/3	1.36/3
Hose I.D., supply air/exhaust air	mm/in.	10 / 3/8	10 / 3/8	10 / 3/8	10 / 3/8	10 / 3/8	10 / 3/8	10 / 3/8	10 / 3/8

Motor size 3 with holding brake		reversible								
Series 67- ATEX conform	**Type** Part no.	**67X-003B** 1030291A	**67X-013B** 1030291B	**67X-023B** 1030291C	**67X-073B** 1030291D	**67X-083B** 1030291E	**67X-093B** 1030291F	**67X-0931B** 1030291G	**67X-1931B** 1030291K	**67X-2931B** 1030291H
ATEX specification		**A**	**D**	**C**	**C**	**A**	**A**	**A**	**A**	**A**
Series 67- without ATEX authorization	**Type** Part no.	**67-003B-1** 103029A	**67-013B-1** 103029B	**67-023B-1** 103029C	**67-073B-1** 103029D	**67-083B-1** 103029E	**67-093B-1** 103029F	**67-0931B-1** 103029G	**67-1931B-1** 103029K	**67-2931B-1** 103029H
Nominal power	W/HP	300/0.4	300/0.4	300/0.4	300/0.4	300/0.4	300/0.4	130/0.174	300/0.4	300/0.4
Nominal speed	rpm	7250	2300	1200	615	350	180	90	2)	2)
Speed (idling)	rpm	14500	4600	2400	1230	700	360	180	100	50
Nominal torque	Nm/in.lbs	0.4/3.54	1.2/10.6	2.4/21.2	4.65/41.15	8.15/72.13	15.9/140.7	13.8/122.13	36/318.6 1)	36/318.6 1)
Start torque min.	Nm/in.lbs	0.6/5.3	1.9/16.8	3.6/31.86	6.95/61.5	12.25/108.4	23.9/211.5	21/185.85	36/318.6 1)	36/318.6 1)
Stall torque	Nm/in.lbs	0.76/6.73	2.2/19.5	4.5/39.8	8.8/77.88	15.2/134.52	30.2/267.27	26.2/231.87	36/318.6 1)	36/318.6 1)
Max. admissible torque	Nm/in.lbs	-	-	-	-	-	36/318.6	36/318.6	36/318.6	36/318.6
Brake torque	Nm/in.lbs	1/8.85	3.4/30.1	6.7/59.3	11.8/104.43	20.6/182.31	-	-	-	-
Air consumption	Nm^3/min/cfm	0.47/16.6	0.47/16.6	0.47/16.6	0.47/16.6	0.47/16.6	0.47/16.6	0.28/9.88	0.47/16.6	0.47/16.6
Weight	kg/lbs	1.35/2.97	1.4/3.08	1.4/3.08	1.45/3.19	1.5/3.3	1.5/3.3	1.7/3.74	1.8/1.76	1.8/1.76
Hose I.D., supply air/exhaust air	mm/in.	10 / 3/8	10 / 3/8	10 / 3/8	10 / 3/8	10 / 3/8	10 / 3/8	10 / 3/8	10 / 3/8	10 / 3/8

Performance data relate to an air pressure of 6 bar (85 PSI) and lubricated air. With oil-free operation the output will be reduced by 10 - 20%.

1) Please take note of the maximum permissible torque for the gear. Please note that these motor gears are not stall-proof. If a higher application-based torque cannot be limited by the customer (e.g. by use of a slip clutch), please contact our application specialists to discuss an alternative solution.

2) At the maximum permissible torque of the gear, operating speed is adjusted to the region of the idle speed. This operating speed can be reduced to up to 25 % of the indicated idle speed by reducing pressure and additional exhaust air throttling. For operation at very low speeds in relation to the idle speed, we recommend the use of spring-assisted vanes (Z vanes).

Optional Equipment:		**for motor size 2.5**	**for motor size 3**
Flange incl. mounting screws	Part no.	4445305	4446105
Bracket incl. mounting screws	Part no.	4445393	4446112
Silencer: motor operates in one direction (right or left rotation)			
1 Hose nozzle	Part no.	823238 (1/8")	410541 (1/4")
1 Silencer	Part no.	129601A (G1/8 /G1/4)	129602A (2xG1/4)
Silencer: Motor is reversible (right or left rotation)			
2 Hose nozzles	Part no.	823238 (1/8")	410541 (1/4")
1 Silencer	Part no.	129601B (G1/4)	129601B (G1/4)
Maintenance unit with lubricator*	Part no.	820454A	820455A
Connection thread		G 1/4	G 1/2
Maintenance unit without lubricator*	Part no.	822408A	822409A
Connection thread		G 1/4	G 1/2
Replacement part set consisting of:		444785A for part no. 107399(1)A,C-H	444786A for part no. 103029(1)B-H,K
vanes, sealant rings, o-rings and silencers	Part no.	444785E for part no. 107399(1)B	444786L for part no. 103029(1)A
Replacement part set for brake consisting of:			
discs, pressure spring and o-rings	Part no.	446096C	446096C

*) Maintenance unit consists of pressure regulator valve, filter and optionally with or without lubricator

Motor size 2.5 and Motor size 3 with holding brake, Series 67(X)-, reversible

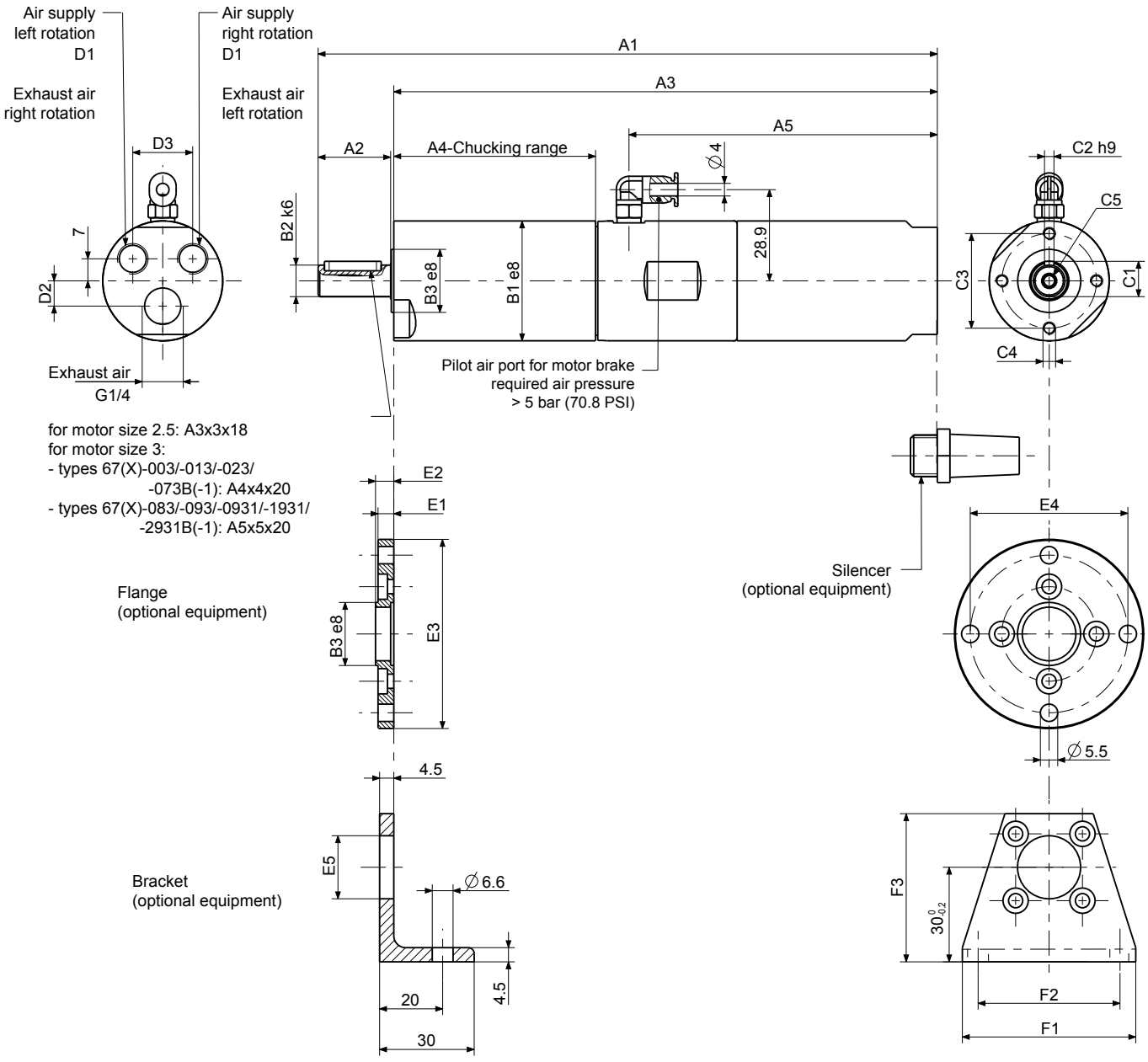

Dimensions in mm

p4134552

Motor size	Series 67(X)- Type			Dimensions of motor (mm)															
				A1	A2	A3	A4	A5	B1	B2	B3	C1	C2	C3	C4	C5	D1	D2	D3
2.5	67(X)-0025B(-1)	67(X)-0125B(-1)	67(X)-0225B(-1)	196	23	172	64	98	38	10	20	11.2	3	30	M4	M4x12	G1/8	8	19
	67(X)-0725B(-1)	67(X)-0325B(-1)	67(X)-0425B(-1)	212		188	80												
	67(X)-24251B(-1)			228		204	96												
3	67(X)-003B(-1)	67(X)-013B(-1)	67(X)-023B(-1)	215	27	187	67	110	42	12	24	13.5	4	34	M5	M4x12	G1/4	11	20
	67(X)-073B(-1)			231		203	83												
	67(X)-083B(-1)	67(X)-093B(-1)	67(X)-0931B(-1)	235	30					14		16	5			M5x12			
	67(X)-1931B(-1)	67(X)-2931B(-1)		250	30	218	82												

Motor size	Series 67(X)- Type			Dimensions of flange (mm)						Dimensions of bracket (mm)		
				B3	E1	E2	E3	E4	E5	F1	F2	F3
2.5	67(X)-0025B(-1)	67(X)-0125B(-1)	67(X)-0225B(-1)	20	5	5.8	60	50	17	55	45	47
	67(X)-0725B(-1)	67(X)-0325B(-1)	67(X)-0425B(-1)									
	67(X)-24251B(-1)											
3	67(X)-003B(-1)	67(X)-013B(-1)	67(X)-023B(-1)	24	6	6.8	65	55	21	60	50	48
	67(X)-073B(-1)											
	67(X)-083B(-1)	67(X)-093B(-1)	67(X)-0931B(-1)									
	67(X)-1931B(-1)	67(X)-2931B(-1)										

300/600/850 W ADVANCED LINE AIR MOTOR ATEX conform/without ATEX authorization for drill-chuck

Motor size 6			reversible								
Series 67X- ATEX conform		**Type** Part no.	**67X-006** 306760A	**67X-086** 306760N	**67X-016** 306760H	**67X-026** 306760B	**67X-036** 306760C	**67X-046** 306760D	**67X-056** 306760E	**67X-066** 306760F	**67X-0661** 306760G
ATEX specification			**A**	**A**	**D**	**C**	**C**	**A**	**A**	**A**	**A**
Series 67X- with threaded shaft ATEX conform		**Type** Part no.	**-** -	**-** -	**67X-016G** 1141327H	**67X-026G** 1141327B	**67X-036G** 1141327C	**67X-046G** 1141327D	**-**	**-**	**-**
ATEX specification			**-**	**-**	**D**	**C**	**C**	**A**	**-**	**-**	**-**
Series 67- without ATEX authorization for drill-chuck		**Type** Part no.	**–** –	**–** –	**67-016B16** 114132H	**67-026B16** 114132B	**67-036B16** 114132C	**67-046B16** 114132D	**67-056B16** 114132E	**67-066B16** 114132F	**67-0661B16** 114132G
Nominal power	W / HP		600/0.8	600/0.8	600/0.8	600/0.8	600/0.8	600/0.8	600/0.8	600/0.8	300/0.4
Nominal speed	rpm		6750	2750	2000	1500	1000	350	250	170	90
Speed (idling)	rpm		13500	5500	4000	3000	2000	700	500	340	180
Nominal torque	Nm / in.lbs		0.85/7.5	2/17.7	2.8/24.78	3.8/33.63	5.7/50.44	16.3/144.3	22.9/202.7	33.7/298.25	31.8/281.43
Start torque min.	Nm / in.lbs		1.25/11.06	3.1/27.435	4.3/38.055	5.7/50.445	8.5/75.225	24.5/216.825	34.3/303.55	50.6/447.81	47.7/422.15
Stall torque	Nm / in.lbs		1.6/14.16	3.9/34.5	5.4/47.8	7.2/63.72	10.8/95.58	31.1/275.24	43.5/385	64/566.4	60.4/534.54
Air consumption	Nm^3/min/cfm		0.85/30	0.85/30	0.85/30	0.85/30	0.85/30	0.85/30	0.85/30	0.85/30	0.55/19.4
Weight	kg / lbs		2.2/4.84	2.7/5.94	2.3/5.06	2.3/5.06	2.3/5.06	2.6/5.72	2.7/5.94	2.7/5.94	2.7/5.94
Hose I.D., supply air/exhaust air	mm / in.		12 / 1/2	12 / 1/2	12 / 1/2	12 / 1/2	12 / 1/2	12 / 1/2	12 / 1/2	12 / 1/2	12 / 1/2
Motor size 6			right rotation								
Series 67X- ATEX conform		**Type** Part no.	**67X-006R** 3067600A	**67X-086R** 3067600N	**67X-016R** 3067600H	**67X-026R** 3067600B	**67X-036R** 3067600C	**67X-046R** 3067600D	**67X-056R** 3067600E	**67X-066R** 3067600F	
ATEX specification			**A**	**A**	**D**	**D**	**C**	**C**	**A**	**A**	
Nominal power	W / HP		850	850/1.14	850/1.14	850/1.14	850/1.14	850/1.14	850/1.14	850/1.14	
Nominal speed	rpm		7250	2985	2100	1650	1075	375	275	180	
Speed (idling)	rpm		14500	5970	4200	3300	2150	750	550	360	
Nominal torque	Nm / in.lbs		1.12/9.9	2.7/23.9	3.9/34.5	4.9/43.4	7.6/67.3	21.6/191.2	29.5/261.1	45.1/399.1	
Start torque min.	Nm / in.lbs		1.68/14.9	4.1/36.3	5.8/51.3	7.4/65.5	11.3/100	32.5/287.6	44.3/392.1	67.6/598.3	
Stall torque	Nm / in.lbs		2.13/18.85	5.2/46.02	7.3/64.6	9.3/82.3	14.3/126.5	41.1/363.7	56.1/496.5	85.7/758.4	
Air consumption	Nm^3/min/cfm		0.85/30	0.85/30	0.85/30	0.85/30	0.85/30	0.85/30	0.85/30	0.85/30	
Weight	kg / lbs		2.2/4.84	2.7/5.94	2.3/5.1	2.3/5.1	2.3/5.1	2.6/5.72	2.7/5.94	2.7/5.94	
Hose I.D., supply air/exhaust air	mm / in.		12 / 1/2	12 / 1/2	12 / 1/2	12 / 1/2	12 / 1/2	12 / 1/2	12 / 1/2	12 / 1/2	

Performance data relate to an air pressure of 6 bar (85 PSI) and lubricated air. With oil-free operation the output will be reduced by 10 - 20%.

Optional Equipment:		**for motor size 6**
Flange incl. mounting screws	Part no.	4446166
Bracket incl. mounting screws	Part no.	4446176
Silencer: motor operates in one direction (right or left rotation)		
1 Hose nozzle	Part no.	410540 (3/8")
1 Silencer	Part no.	129563A (G3/8/G1/2) **)
Silencer: Motor is reversible (right or left rotation)		
2 Hose nozzles	Part no.	410540 (3/8")
1 Silencer	Part no.	129563B (G1/2)
Drill-Chuck		
Range 1 - 13 mm / B 16	Part no.	804652
Quick change chuck		
Range 1 - 13 mm / B 16	Part no.	804663
Maintenance unit with lubricator*	Part no.	820455A
Connection thread		G 1/2
Maintenance unit without lubricator*	Part no.	822409A
Connection thread		G 1/2
Replacement part set consisting of:	Part no.	444787A for part no. 306760B-D,H,N/for part no. 3067600B-D,H,N/for part no. 114132B-D,H,N
vanes, sealant rings, o-rings and silencers	Part no.	444787B for part no. 306760E-G/for part no. 3067600E-F/ for part no. 114132E-G
		444787H for part no. 306760A/for part no. 3067600A

*) Maintenance unit consists of pressure regulator valve, filter and optionally with or without lubricator

**) the output will be reduced by approx. 10%

Motor size 6, Series 67(X)-, reversible and right rotation

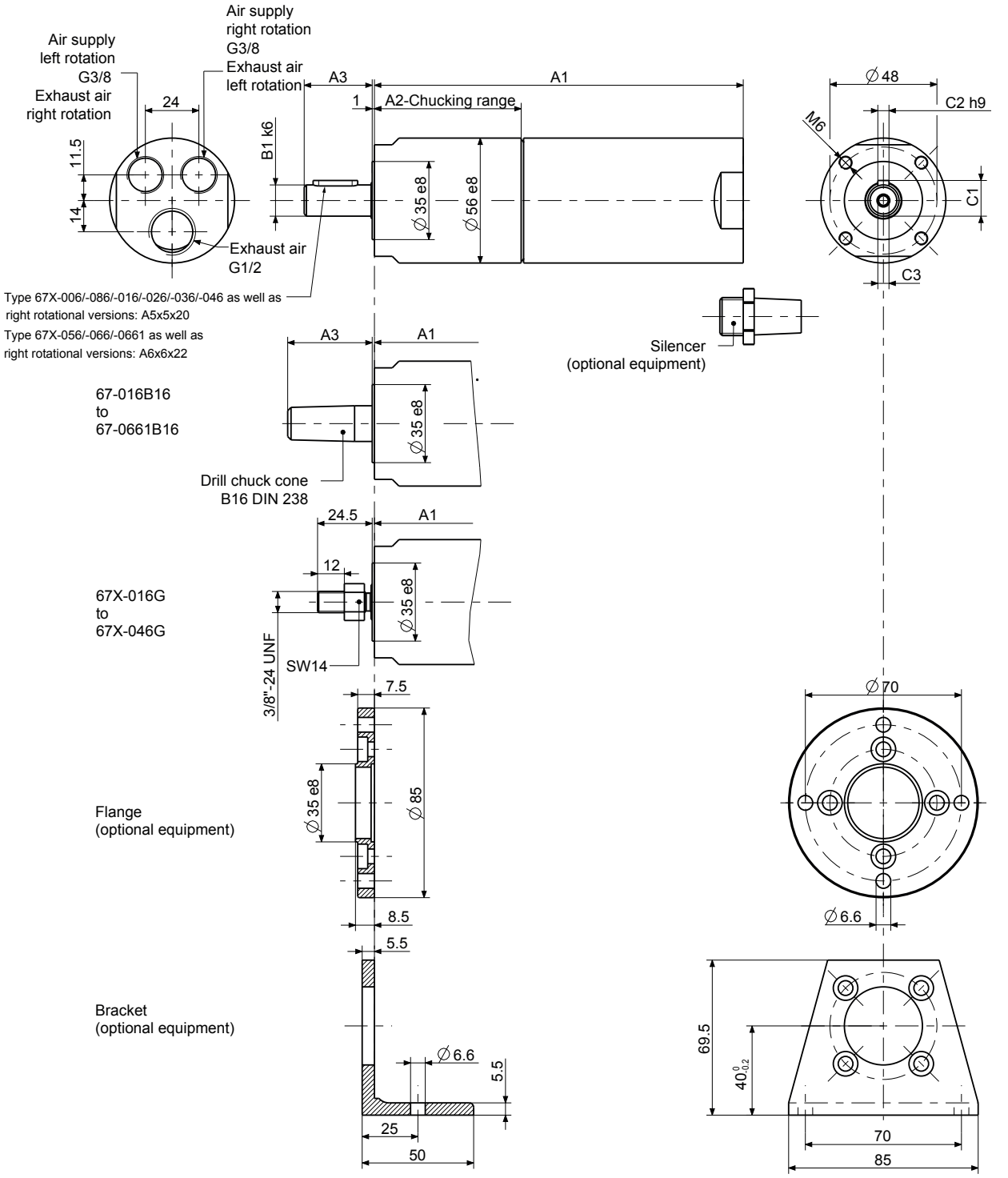

Dimensions in mm

p4402988

Motor size	Series 67(X)- Type				Dimensions of motor (mm)						
					A1	A2	A3	B1	C1	C2	C3
6	67X-006	67X-016(G)	67X-026(G)	67X-036(G)	165.5	66	30.5	14	16	5	M5x12
	67X-046(G)	67X-086			183.5	84					
	67X-056	67X-066	67X-0661		180	80.5	35	19	21.5	6	M6x12
	67X-006R	67X-016R	67X-026R	67X-036R	165.5	66	30.5	14	16	5	M5x12
	67X-046R	67X-086R			183.5	84					
	67X-056R	67X-066R			180	80.5	35	19	21.5	6	M6x12
	67-016B16	67-026B16	67-036B16		166	66	37.5	–	–	–	–
	67-046B16				184	84					
	67-056B16	67-066B16	67-0661B16		180	80.5	38				

900/1100 W ADVANCED LINE AIR MOTOR ATEX conform

Motor size 7		reversible							
Series 67X- ATEX conform	**Type** Part no.	**67X-007** 306770A	**67X-087** 306770N	**67X-017** 306770H	**67X-027** 306770B	**67X-037** 306770C	**67X-047** 306770D	**67X-057** 306770E	**67X-067** 306770F
ATEX specification		**A**	**A**	**D**	**C**	**C**	**A**	**A**	**A**
Nominal power	W / HP	900/1.2	900/1.2	900/1.2	900/1.2	900/1.2	900/1.2	900/1.2	900/1.2
Nominal speed	rpm	6300	2600	1835	1425	950	325	235	155
Speed (idling)	rpm	12600	5200	3670	2850	1900	650	470	310
Nominal torque	Nm / in.lbs	1.35/11.95	3.3/29.2	4.6/40.7	6/53.1	9/79.65	26.4/233.6	36.5/323	55.4/490.3
Start torque min.	Nm / in.lbs	2/17.7	4.9/43.36	7/61.95	9/79.65	13.5/119.5	39.6/350.46	54.8/485	83.1/735.4
Stall torque	Nm / in.lbs	2.6/23	6.2/54.87	8.9/78.8	11.4/100.89	17.1/151.3	50.2/444.27	69.4/614.19	105.3/931.9
Air consumption	Nm^3/min/cfm	1.4/49.42	1.4/49.42	1.4/49.42	1.4/49.42	1.4/49.42	1.4/49.42	1.4/49.42	1.4/49.42
Weight	kg / lbs	2.5/5.5	2.9/6.38	2.6/5.72	2.6/5.72	2.6/5.72	2.9/6.38	3/6.6	3/6.6
Hose I.D., supply air/exhaust air	mm / in.	12 / 1/2	12 / 1/2	12 / 1/2	12 / 1/2	12 / 1/2	12 / 1/2	12 / 1/2	12 / 1/2

Motor size 7		right rotation							
Series 67X- ATEX conform	**Type** Part no.	**67X-007R** 3067700A	**67X-087R** 3067700N	**67X-017R** 3067700H	**67X-027R** 3067700B	**67X-037R** 3067700C	**67X-047R** 3067700D	**67X-057R** 3067700E	**67X-067R** 3067700F
ATEX specification		**A**	**A**	**D**	**D**	**C**	**C**	**A**	**A**
Nominal power	W / HP	1100	1100	1100	1100	1100	1100	1100	1100
Nominal speed	rpm	6550	2625	1900	1460	970	330	240	155
Speed (idling)	rpm	13100	5250	3800	2920	1940	660	480	310
Nominal torque	Nm / in.lbs	1.6/14,2	4/35.4	5.5/48.7	7.2/63.7	10.8/95.6	31.8/281.4	43.8/387.6	67.7/599.1
Start torque min.	Nm / in.lbs	2.4/21.2	6/53.1	8.3/73.5	10.8/95.6	16.2/143.4	47.7/422.1	65.7/581.4	101.6/899.2
Stall torque	Nm / in.lbs	3.0/26.55	7.6/67.3	10.5/92.9	13.7/121.2	20.5/181.4	60.5/535.4	83.2/736.3	128.8/1129.9
Air consumption	Nm^3/min/cfm	1.4/49.42	1.4/49.42	1.4/49.42	1.4/49.42	1.4/49.42	1.4/49.42	1.4/49.42	1.4/49.42
Weight	kg / lbs	2.5/5.5	2.9/6.38	2.6/5.72	2.6/5.72	2.6/5.72	2.9/6.38	3/6.6	3/6.6
Hose I.D., supply air/exhaust air	mm / in.	12 / 1/2	12 / 1/2	12 / 1/2	12 / 1/2	12 / 1/2	12 / 1/2	12 / 1/2	12 / 1/2

Performance data relate to an air pressure of 6 bar (85 PSI) and lubricated air. With oil-free operation the output will be reduced by 10 - 20%.

Optional Equipment:		for motor size 7
Flange incl. mounting screws	Part no.	4446166
Bracket incl. mounting screws	Part no.	4446176
Silencer: motor operates in one direction (right or left rotation)		
1 Hose nozzle	Part no.	410540 (3/8")
1 Silencer	Part no.	129563A (G3/8/G1/2) **)
Silencer: Motor is reversible (right or left rotation)		
2 Hose nozzles	Part no.	410540 (3/8")
1 Silencer	Part no.	129563B (G1/2)
Drill-Chuck		
Range 1 - 13 mm / B 16	Part no.	–
Quick change chuck		
Range 1 - 13 mm / B 16	Part no.	–
Maintenance unit with lubricator*	Part no.	821608A
Connection thread		G 3/4
Maintenance unit without lubricator*	Part no.	826982A
Connection thread		G 3/4
Replacement part set consisting of:	Part no.	444919A / for part no. 306770B-D, H, N and 3067700B-D, H, N
vanes, sealant rings, o-rings and silencers		444919B / for part no. 306770E-F and 3067700E-F
	Part no.	444919F / for part no. 306770A and 3067700A

*) Maintenance unit consists of pressure regulator valve, filter and optionally with or without lubricator

**) the output will be reduced by approx. 10%

Motor size 7, Series 67(X)-, reversible and right rotation

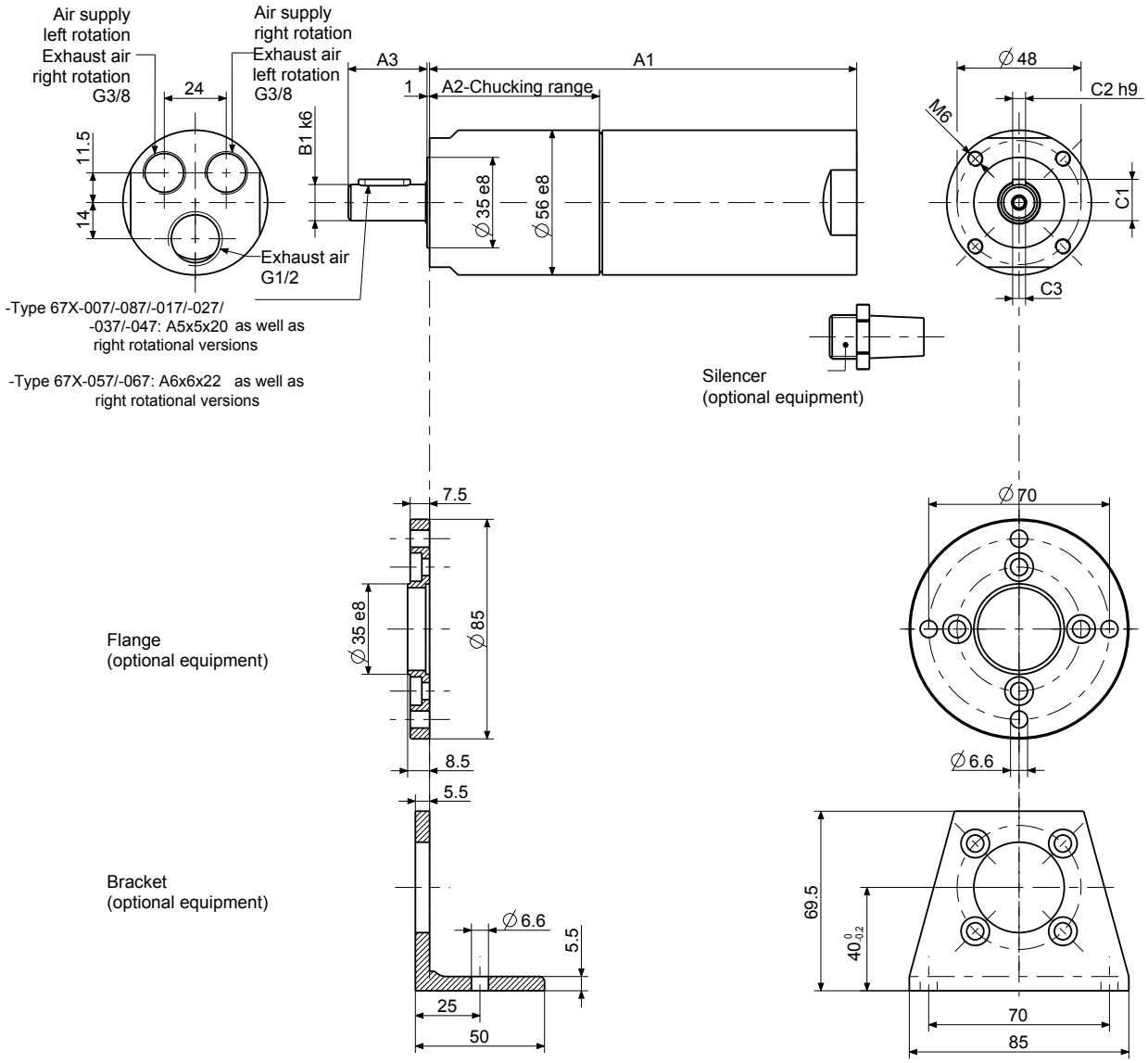

Dimensions in mm

p4402988

Motor size	Series 67(X)- Type				Dimensions of motor (mm)						
					A1	A2	A3	B1	C1	C2	C3
7	67X-007(R)	67X-017(R)	67X-027(R)	67X-037(R)	190.5	66	30.5	14	16	5	M5x12
	67X-047(R)	67X-087(R)			208.5	84					
	67X-057(R)	67X-067(R)			205	81	35	19	21.5	6	M6x12

600/850 W ADVANCED LINE AIR MOTOR with high torque

Motor size 6 with high torque		reversible			
Series 67X- ATEX conform	**Type** Part no.	**67X-746** 306760I	**67X-756** 306760K	**67X-766** 306760L	**67X-516** 306760M
ATEX specification		**A**			
Nominal power	W / HP	600/0.8	600/0.8	600/0.8	600/0.8
Nominal speed	rpm	85	65	42	24
Speed (idling)	rpm	170	130	84	48
Nominal torque	Nm / in.lbs	67.4/596.5	88.1/779.7	136.4/1207.14	238.7/2112.5
Start torque min.	Nm / in.lbs	101.1/894.7	132.2/1170	204.6/1810.7	358.1/3169.2
Stall torque	Nm / in.lbs	128/1132.8	167.4/1481.49	259.2/2293.9	453.5/4013.5
Air consumption	Nm^3/min/cfm	0.85/30	0.85/30	0.85/30	0.85/30
Weight	kg / lbs	3.6/7.92	3.6/7.92	3.6/7.92	4.4/9.68
Hose I.D., supply air/exhaust air	mm / in.	12 / 1/2	12 / 1/2	12 / 1/2	12 / 1/2
Motor size 6 with high torque		right rotation			
Series 67X- ATEX conform	**Type** Part no.	**67X-746R** 3067600I	**67X-756R** 3067600K	**67X-766R** 3067600L	**67X-516R** 3067600M
ATEX specification		**A**			
Nominal power	W / HP	850/1.14	850/1.14	850/1.14	850/1.14
Nominal speed	rpm	95	67	45	25
Speed (idling)	rpm	190	134	90	50
Nominal torque	Nm / in.lbs	85/752.25	120/1062	180/1593	325/2876.25
Start torque min.	Nm / in.lbs	128/1133	180/1593	270/2389.5	487/4310
Stall torque	Nm / in.lbs	162/1433.7	228.5/2022.2	300/2655 1)	600/5310 1)
Max. admissible torque	Nm / in.lbs	-	-	300/2655	600/5310
Air consumption	Nm^3/min/cfm	0.85/30	0.85/30	0.85/30	0.85/30
Weight	kg / lbs	3.6/7.92	3.6/7.92	3.6/7.92	4.4/9.68
Hose I.D., supply air/exhaust air	mm / in.	12 / 1/2	12 / 1/2	12 / 1/2	12 / 1/2

Performance data relate to an air pressure of 6 bar (85 PSI) and lubricated air. With oil-free operation the output will be reduced by 10 - 20%.

1) Please take note of the maximum permissible torque for the gear. Please note that these motor gears are not stall-proof. If a higher application-based torque cannot be limited by the customer (e.g. by use of a slip clutch), please contact our application specialists to discuss an alternative solution.

Optional Equipment		**for motor size 6**
Flange incl. mounting screws	Part no.	4134632
Bracket incl. mounting screws	Part no.	44461738
Silencer: motor operates in one direction (right or left rotation)		
1 Hose nozzle	Part no.	410540 (3/8")
1 Silencer	Part no.	129563A (G3/8/G1/2) **)
Silencer: Motor is reversible (right or left rotation)		
2 Hose nozzles	Part no.	410540 (3/8")
1 Silencer	Part no.	129563B (G1/2)
Maintenance unit with lubricator*	Part no.	820455A
Connection thread		G 1/2
Maintenance unit without lubricator*	Part no.	822409A
Connection thread		G 1/2
Replacement part set consisting of:		444787L for types 67X-746(R) to 67X-766(R)
vanes, sealant rings, o-rings and silencers	Part no.	444787E for type 67X-516(R)

*) Maintenance unit consists of pressure regulator valve, filter and optionally with or without lubricator

**) the output will be reduced by approx. 10%

Motor size 6 High torque stainless steel motors
Series 67X-
reversible and right rotation

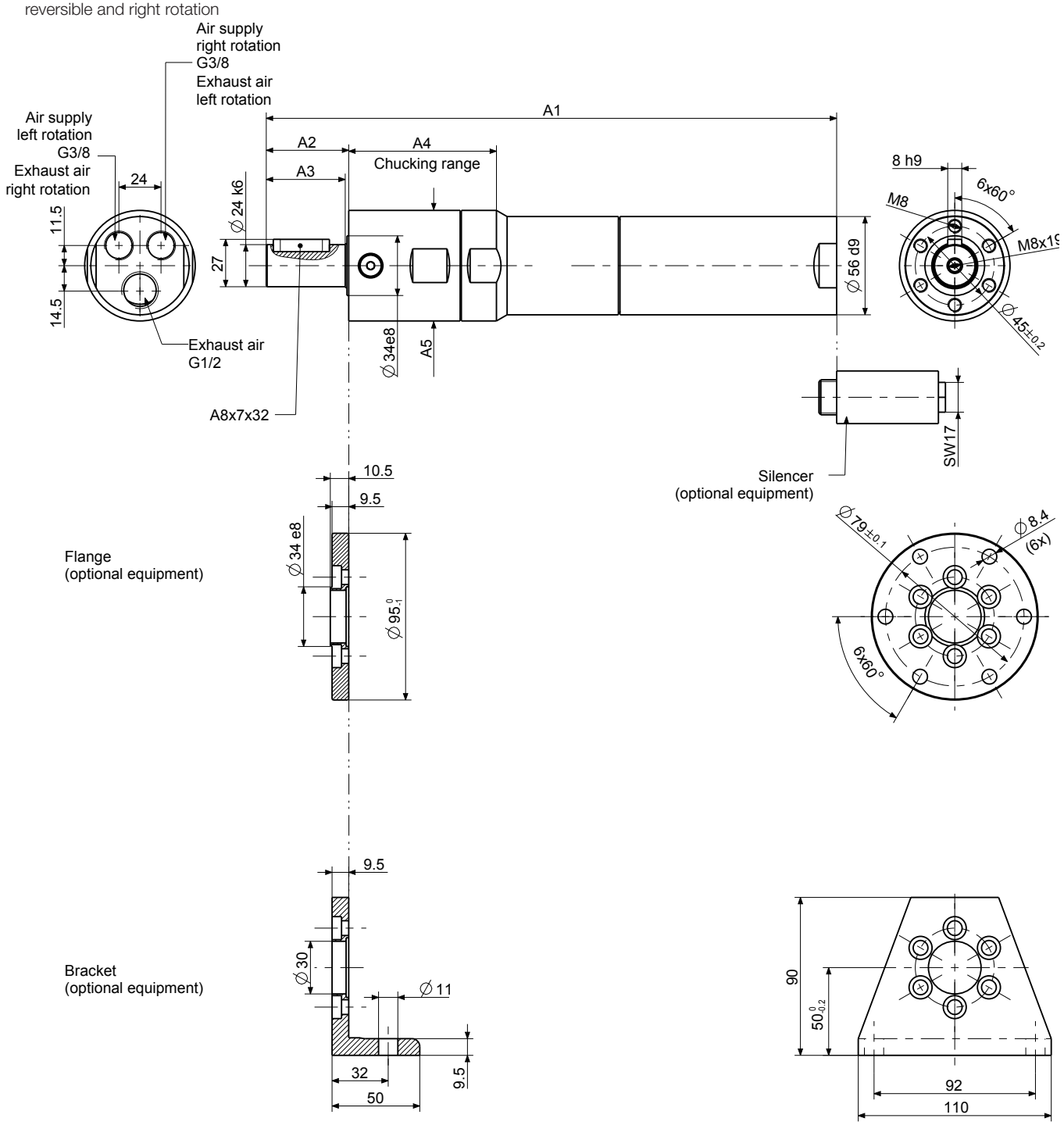

Dimensions in mm

p444338

Motor size	Series 67X- Type			Dimensions of motor (mm)				
				A1	A2	A3	A4	A5
6	67X-746(R)	67X-756(R)	67X-766(R)	286.4	47	45	61	56e8
	67X-516(R)			300	47	45	84.2	63h8

900/1100 W ADVANCED LINE AIR MOTOR with high torque

Motor size 7 with high torque		reversible			
Series 67X- ATEX conform	**Type** Part no.	**67X-747** 306770I	**67X-757** 306770K	**67X-767** 306770L	**67X-517** 306770M
ATEX specification		**A**			
Nominal power	W / HP	900/1.2	900/1.2	900/1.2	900/1.2
Nominal speed	rpm	80	60	40	22
Speed (idling)	rpm	160	120	80	44
Nominal torque	Nm / in.lbs	107.4/950.5	143.2/1267.32	214.8/1901	390.6/3456.81
Start torque min.	Nm / in.lbs	161.1/1425.7	214.8/1901	300/2655 1)	585.9/5185.2
Stall torque	Nm / in.lbs	204.1/1806.3	272.1/2408.1	300/2655 1)	600/5310 1)
Max. admissible torque	Nm / in.lbs	-	-	300/2655	600/5310
Air consumption	Nm^3/min/cfm	1.4/49.42	1.4/49.42	1.4/49.42	1.4/49.42
Weight	kg / lbs	3.8/8.36	3.9/8.58	3.9/8.58	4.7/10.34
Hose I.D., supply air/exhaust air	mm / in.	12 / 1/2	12 / 1/2	12 / 1/2	12 / 1/2
Motor size 7 with high torque		right rotation			
Series 67X- ATEX conform	**Type** Part no.	**67X-747R** 3067700I	**67X-757R** 3067700K	**67X-767R** 3067700L	**67X-517R** 3067700M
ATEX specification		**A**			
Nominal power	W / HP	1100/1.5	1100/1.5	1100/1.5	1100/1.5
Nominal speed	rpm	80	60	40	22
Speed (idling)	rpm	160	120	80	44
Nominal torque	Nm / in.lbs	131/1159.35	175/1548.75	262.6/2324	477/4221.45
Start torque min.	Nm / in.lbs	197/1743.45	262.6/2324	300/2655 1)	600/5310 1)
Stall torque	Nm / in.lbs	249.5/2208	300/2655 1)	300/2655 1)	600/5310 1)
Max. admissible torque	Nm / in.lbs	-	300/2655	300/2655	600/5310
Air consumption	Nm^3/min/cfm	1.4/49.42	1.4/49.42	1.4/49.42	1.4/49.42
Weight	kg / lbs	3.8/8.36	3.9/8.58	3.9/8.58	4.7/10.34
Hose I.D., supply air/exhaust air	mm / in.	12 / 1/2	12 / 1/2	12 / 1/2	12 / 1/2

Performance data relate to an air pressure of 6 bar (85 PSI) and lubricated air. With oil-free operation the output will be reduced by 10 - 20%.

1) Please take note of the maximum permissible torque for the gear. Please note that these motor gears are not stall-proof. If a higher application-based torque cannot be limited by the customer (e.g. by use of a slip clutch), please contact our application specialists to discuss an alternative solution.

Optional Equipment		**for motor size 7**
Flange incl. mounting screws	Part no.	4134632
Bracket incl. mounting screws	Part no.	44461738
Silencer: motor operates in one direction (right or left rotation)		
1 Hose nozzle	Part no.	410540 (3/8")
1 Silencer	Part no.	129563A (G3/8/G1/2) **)
Silencer: Motor is reversible (right or left rotation)		
2 Hose nozzles	Part no.	410540 (3/8")
1 Silencer	Part no.	129563B (G1/2)
Maintenance unit with lubricator*	Part no.	821608A
Connection thread		G 3/4
Maintenance unit without lubricator*	Part no.	826982A
Connection thread		G 3/4
Replacement part set consisting of: vanes, sealant rings, o-rings and silencers	Part no.	444787M for types 67X-747(R) to 67X-767(R) 444919D for type 67X-517(R)

*) Maintenance unit consists of pressure regulator valve, filter and optionally with or without lubricator

**) the output will be reduced by approx. 10%

Motor size 7 High torque stainless steel motors
Series 67X-
reversible and right rotation

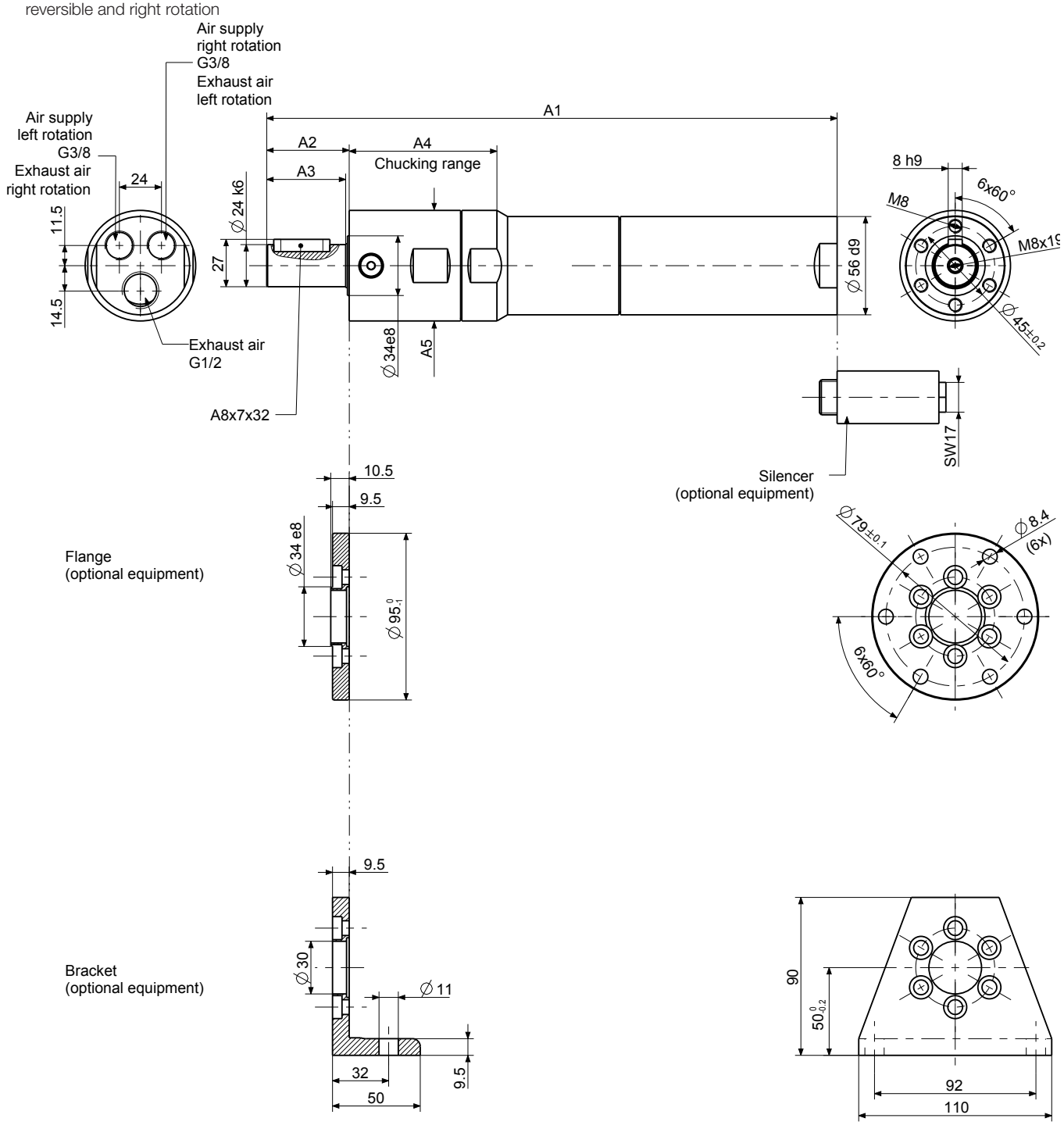

Dimensions in mm

p444338

Motor size	Series 67X- Type			Dimensions of motor (mm)				
				A1	A2	A3	A4	A5
7	67X-747	67X-757	67X-767	311.5	47	45	61	56e8
	67X-517			325	47	45	84.2	63h8

300/600/900 W ADVANCED LINE HIGH TORQUE AIR MOTOR with integrated holding brake

Motor size 6 with holding brake		reversible								
Series 67X- ATEX conform	**Type** Part no.	**67X-006B** 1027501A	**67X-086B** 1027501N	**67X-016B** 1027501H	**67X-026B** 1027501B	**67X-036B** 1027501C	**67X-046B** 1027501D	**67X-056B** 1027501E	**67X-066B** 1027501F	**67X-0661B** 1027501G
ATEX specification		**A**	**A**	**D**	**C**	**C**	**A**	**A**	**A**	**A**
Series 67- without ATEX authorization	**Type** Part no	**67-006B-1** 102750A	**67-086B-1** 102750N	**67-016B-1** 102750H	**67-026B-1** 102750B	**67-036B-1** 102750C	**67-046B-1** 102750D	**67-056B-1** 102750E	**67-066B-1** 102750F	**67-0661B-1** 102750G
Nominal power	W / HP	600/0.8	600/0.8	600/0.8	600/0.8	600/0.8	600/0.8	600/0.8	600/0.8	300/0.4
Nominal speed	rpm	6750	2750	2000	1500	1000	350	250	170	90
Speed (idling)	rpm	13500	5500	4000	3000	2000	700	500	340	180
Nominal torque	Nm / in.lbs	0.85/7.5	2.0/17.7	2.8/24.78	3.8/33.63	5.7/50.4	16.3/144.3	22.9/202.7	33.7/298.3	31.8/281.4
Start torque min.	Nm / in.lbs	1.25/11.06	3.1/27.4	4.3/38.06	5.7/50.4	8.5/75.2	24.5/216.8	34.3/303.6	50.6/447.8	47.7/422.15
Stall torque	Nm / in.lbs	1.6/14.16	3.9/34.5	5.4/47.8	7.2/63.7	10.8/95.6	31.1/275.2	43.5/385	64/566.4	60.4/534.54
Brake torque	Nm / in.lbs	3/26.55	7.3/64.6	10.3/91.15	13.2/116.8	20/177	58/513.3	79.2/700.9	120/1062	108/955.8
Air consumption	Nm^3/min/cfm	0.85/30	0.85/30	0.85/30	0.85/30	0.85/30	0.85/30	0.85/30	0.85/30	0.55/30
Weight	kg / lbs	3.35/7.37	3.35/7.37	3.45/7.59	3.45/7.59	3.45/7.59	3.75/8.25	3.75/8.25	3.75/8.25	3.75/8.25
Hose I.D., supply air/exhaust air	mm / in.	12 / 1/2	12 / 1/2	12 / 1/2	12 / 1/2	12 / 1/2	12 / 1/2	12 / 1/2	12 / 1/2	12 / 1/2

Motor size 7 with holding brake		reversible							
Series 67X- ATEX conform	**Type** Part no.	**67X-007B** 1030051A	**67X-087B** 1030051N	**67X-017B** 1030051H	**67X-027B** 1030051B	**67X-037B** 1030051C	**67X-047B** 1030051D	**67X-057B** 1030051E	**67X-067B** 1030051F
ATEX specification		**A**	**A**	**D**	**C**	**C**	**A**	**A**	**A**
Series 67- without ATEX authorization	**Type** Part no	**67-007B-1** 103005A	**67-087B-1** 103005N	**67-017B-1** 103005H	**67-027B-1** 103005B	**67-037B-1** 103005C	**67-047B-1** 103005D	**67-057B-1** 103005E	**67-067B-1** 103005F
Nominal power	W / HP	900/1.2	900/1.2	900/1.2	900/1.2	900/1.2	900/1.2	900/1.2	900/1.2
Nominal speed	rpm	6300	2600	1835	1425	950	325	235	155
Speed (idling)	rpm	12600	5200	3670	2850	1900	650	470	310
Nominal torque	Nm / in.lbs	1.35/11.95	3.3/29.2	4.6/40.7	6.0/53.1	9.0/79.65	26.4/233.6	36.5/322.14	55.4/490.3
Start torque min.	Nm / in.lbs	2.0/17.7	4.9/43.4	7.0/62	9.0/79.65	13.5/119.5	39.6/350.5	54.8/485	83.1/735.44
Stall torque	Nm / in.lbs	2.6/23	6.2/54.9	8.9/78.8	11.4/101	17.1/151.3	50.2/444.3	69.4/614.2	105.3/931.9
Brake torque	Nm / in.lbs	3/26.55	7.3/64.6	10.3/91.2	13.2/116.8	20/177	58/513.3	79.2/700.9	120/1062
Air consumption	Nm^3/min/cfm	1.4/49.4	1.4/49.4	1.4/49.4	1.4/49.4	1.4/49.4	1.4/49.4	1.4/49.4	1.4/49.4
Weight	kg / lbs	3.55/7.8	3.55/7.8	3.65/8	3.65/8	3.65/8	3.95/8.7	3.95/8.7	3.95/8.7
Hose I.D., supply air/exhaust air	mm / in.	12 / 1/2	12 / 1/2	12 / 1/2	12 / 1/2	12 / 1/2	12 / 1/2	12 / 1/2	12 / 1/2

Performance data relate to an air pressure of 6 bar (85 PSI) and lubricated air. With oil-free operation the output will be reduced by 10 - 20%. **) the output will be reduced by approx. 10%

Optional Equipment		**for motor size 6**	**for motor size 7**
Flange incl. mounting screws	Part no.	4446166	4446166
Bracket incl. mounting screws	Part no.	4446176	4446176
Silencer: motor operates in one direction (right or left rotation)			
1 Hose nozzle	Part no.	410540 (G3/8)	
1 Silencer	Part no.	129563A (G3/8/G1/2) **)	
Silencer: Motor is reversible (right or left rotation)			
2 Hose nozzles	Part no.	410540 (G3/8)	
1 Silencer	Part no.	129563B (G1/2)	
Maintenance unit with lubricator*	Part no.	820455A	821608A
Connection thread		G 1/2	G 3/4
Maintenance unit without lubricator*	Part no.	822409A	826982A
Connection thread		G 1/2	G 3/4
Replacement part set consisting of: vanes, sealant rings, o-rings and silencers	Part no.	444787A for part no. 102750(1)B-D 444787B for part no. 102750(1)E-F 444787H for part no. 102750(1)A, N	444919A for part no. 103005(1)B-D 444919B for part no. 103005(1)E-G 444919F for part no. 103005(1)A, N
Replacement part set for brake consisting of: discs, pressure spring,o-rings and silencer	Part no.	444787G	444787G

*) Maintenance unit consists of pressure regulator valve, filter and optionally with or without lubricator **) the output will be reduced by approx. 10%

Motor size 6 and Motor size 7 with holding brake, Series 67(X)-, reversible

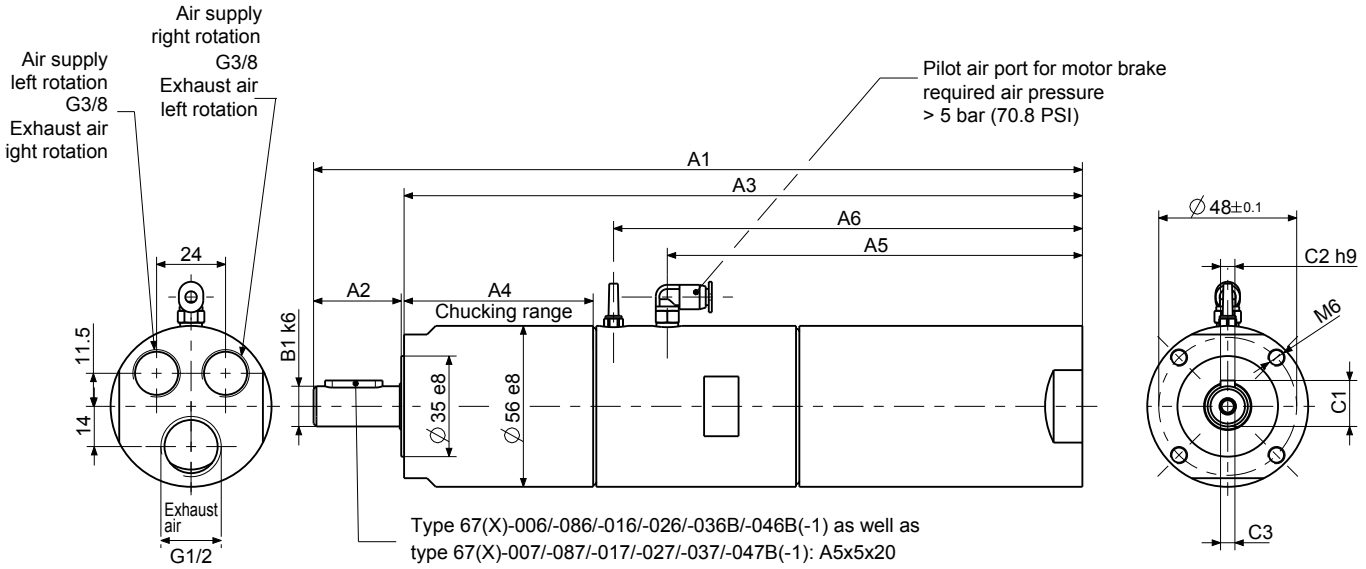

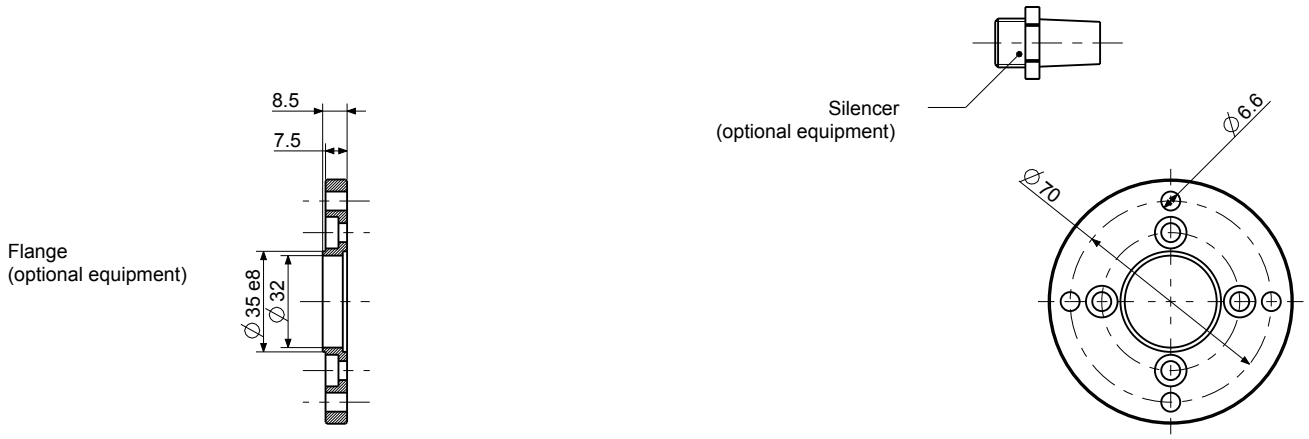

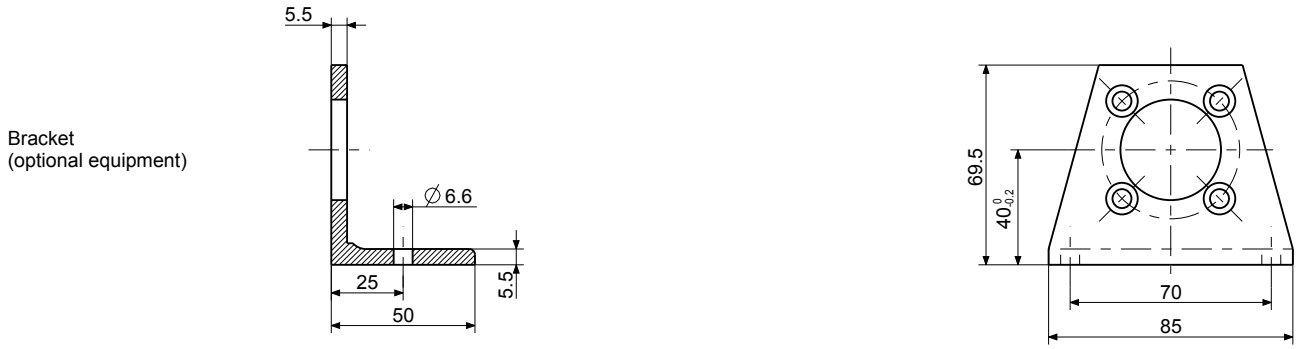

Dimensions in mm

p110531

Motor size	Series 67(X)- Type				Dimensions (mm) A1	A2	A3	A4	A5	A6	B1	C1	C2	C3
6	67(X)-006B(-1)	67(X)-016B(-1)	67(X)-026B(-1)	67(X)-036B(-1)	267.5	30	236.1	65.8	144.5	163.2	14	16	5	M5x12
	67(X)-046B(-1)	67(X)-086B(-1)			285.6		254.1	83.8						
	67(X)-056B(-1)	67(X)-066B(-1)	67(X)-0661B(-1)		287.6	35	250.5	80.4			19	21.5	6	M6x12

Motor size	Series 67(X)- Type				Dimensions (mm) A1	A2	A3	A4	A5	A6	B1	C1	C2	C3
7	67(X)-007B(-1)	67(X)-017B(-1)	67(X)-027B(-1)	67(X)-037B(-1)	292.6	30	261.1	65.8	169.5	188.1	14	16	5	M5x12
	67(X)-047B(-1)	67(X)-087B(-1)			310.6		279.1	83.8						
	67(X)-057B(-1)	67(X)-067B(-1)			312.6	35	275.5	80.4			19	21.5	6	M6x12

600/900 W ADVANCED LINE HIGH TORQUE AIR MOTOR with integrated holding brake

			Motor size 6 with holding brake reversible				Motor size 7 with holding brake reversible			
Series 67X- ATEX conform		**Type**	**67X-746B**	**67X-756B**	**67X-766B**	**67X-516B**	**67X-747B**	**67X-757B**	**67X-767B**	**67X-517B**
		Part no.	1027501P	1027501R	1027501S	1027501M	1030051P	1030051R	1030051S	1030051M
ATEX specification			A				A			
Series 67- without ATEX authorization		**Type**	**67-746B-1**	**67-756B-1**	**67-766B-1**	**67-516B-1**	**67-747B-1**	**67-757B-1**	**67-767B-1**	**67-517B-1**
		Part no	102750P	102750R	102750S	102750M	103005P	103005R	103005S	103005M
Nominal power	W / HP		600/0.8	600/0.8	600/0.8	600/0.8	900/1.2	900/1.2	900/1.2	900/1.2
Nominal speed	rpm		85	65	42	24	80	60	40	22
Speed (idling)	rpm		170	130	84	48	160	120	80	44
Nominal torque	Nm / in.lbs		67.4/596.5	88.1/779.7	136.4/1207.1	238.7/2112.5	107.4/950.5	143.2/1267.3	214.8/1901	390.6/3456.8
Start torque min.	Nm / in.lbs		101.1/894.7	132.2/1170	204.6/1810.7	358.1/3169.2	161.1/1425.7	214.8/1901	300/2655 [1]	585.9/5185.2
Stall torque	Nm / in.lbs		128/1132.8	167.4/1481.5	259.2/2293.9	453.5/4013.5	204.1/1806.3	272.1/2408.1	300/2655 [1]	600/5310 [1]
Max. admissible torque	Nm / in.lbs		-	300/2655	300/2655	600/5310	-	300/2655	300/2655	600/5310
Brake torque	Nm / in.lbs		232/2053.2	-	-	-	232/2053.2	-	-	-
Air consumption	Nm^3/min/cfm		0.85/30	0.85/30	0.85/30	0.85/30	1.4/49.42	1.4/49.42	1.4/49.42	1.4/49.42
Weight	kg / lbs		4.6/10.12	4.6/10.12	4.6/10.12	5.4/11.88	4.8/10.56	4.8/10.56	4.8/10.56	5.6/12.32
Hose I.D. supply air/exhaust air	mm / in.		12 / 1/2	12 / 1/2	12 / 1/2	12 / 1/2	12 / 1/2	12 / 1/2	12 / 1/2	12 / 1/2

Performance data relate to an air pressure of 6 bar (85 PSI) and lubricated air. With oil-free operation the output will be reduced by 10 - 20%.

1) Please take note of the maximum permissible torque for the gear. Please note that these motor gears are not stall-proof. If a higher application-based torque cannot be limited by the customer (e.g. by use of a slip clutch), please contact our application specialists to discuss an alternative solution.

Optional Equipment		for motor size 6 and 7
Flange incl. mounting screws	Part no.	4134632
Bracket incl. mounting screws	Part no.	44461738
Silencer: motor operates in one direction (right or left rotation)		
1 Hose nozzle	Part no.	410540 (G3/8)
1 Silencer	Part no.	129563A (G3/8/G1/2) **)
Silencer: Motor is reversible (right or left rotation)		
2 Hose nozzles	Part no.	410540 (G3/8)
1 Silencer	Part no.	129563B (G1/2)

Optional Equipment		for motor size 6	for motor size 7
Maintenance unit with lubricator*	Part no.	820455A	821608A
Connection thread		G 1/2	G 3/4
Maintenance unit without lubricator*	Part no.	822409A	826982A
Connection thread		G 1/2	G 3/4
Replacement part set consisting of:		444787D for types 67(X)-746B(-1) to .-766B(-1)	444919C for types 67(X)-747B(-1) to .-767B(-1)
vanes, sealant rings, o-rings and silencers	Part no.	444787E for type 67(X)-516B(-1)	444787E for type 67(X)-517B(-1)
Replacement part set for brake consisting of:			
discs, pressure spring and o-rings	Part no.	444787G	444787G

*) Maintenance unit consists of pressure regulator valve, filter and optionally with or without lubricator

**) the output will be reduced by approx. 10%

Motor size 6 and Motor size 7 with holding brake, Series 67(X)-, reversible

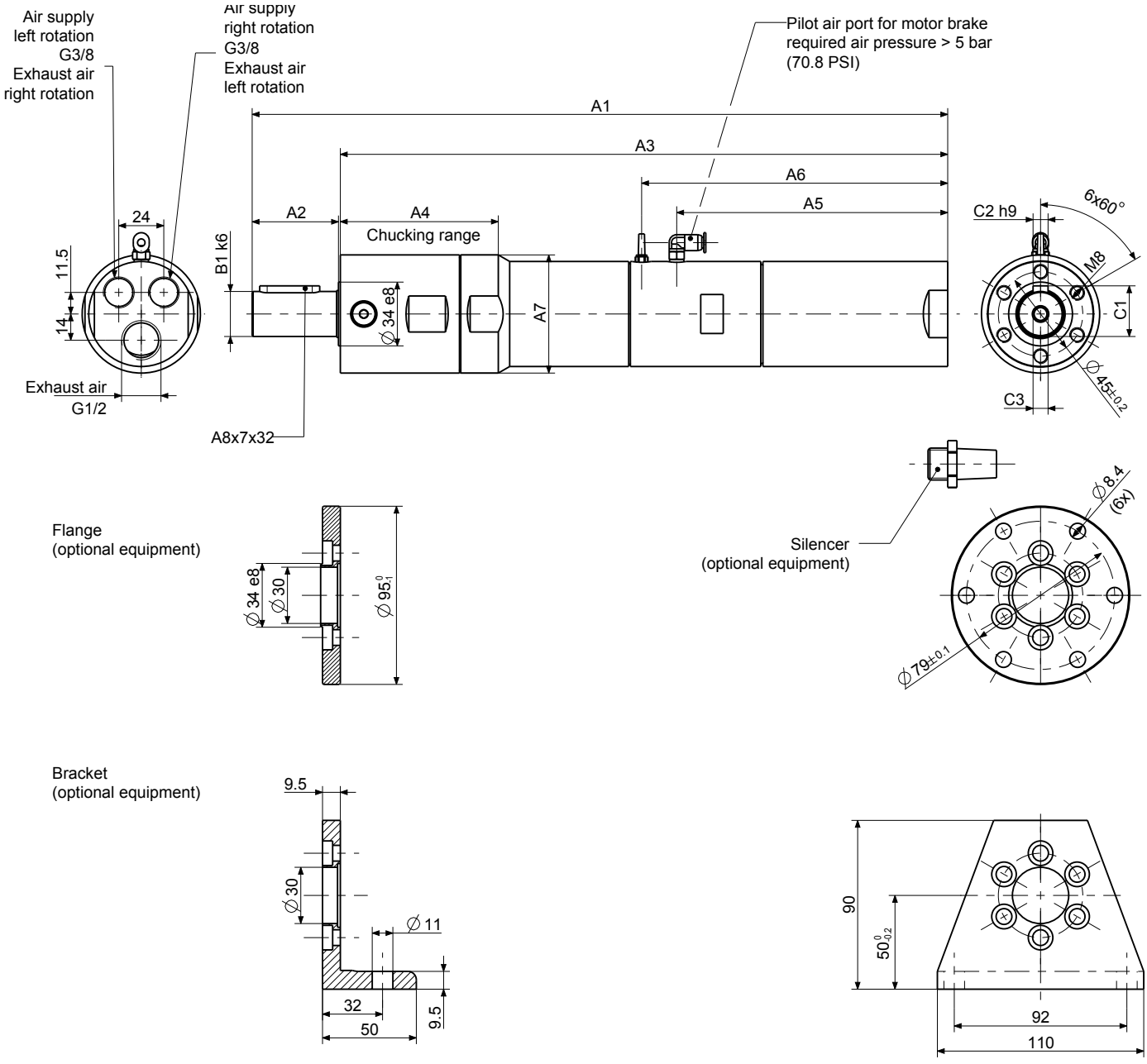

Dimensions in mm

p110532

Motor size	Series 67(X)- Type			Dimensions (mm) A1	A2	A3	A4	A5	A6	A7	B1	C1	C2	C3
6	67(X)-746B(-1) 67(X)-516B(-1)	67(X)-756B(-1)	67(X)-766B(-1)	357 370.8	45	310 323.8	139.6 84.2	144.5	163.2	56e8 63h8	24	27	8	M8x12

Motor size	Series 67(X)- Type			Dimensions (mm) A1	A2	A3	A4	A5	A6	A7	B1	C1	C2	C3
7	67(X)-747B(-1) 67(X)-517B(-1)	67(X)-757B(-1)	67(X)-767B(-1)	382.1 395.8	45	335.1 348.8	140 84.2	169.5	188.2	56e8 63h8	24	27	8	M8x12

700/1600/2200 W ADVANCED LINE AIR MOTOR

Motor size 8		reversible						
Series 67X- ATEX conform	**Type** Part no.	**67X-008** 306780A	**67X-028** 306780B	**67X-038** 306780C	**67X-048** 306780D	**67X-058** 306780E	**67X-0581** 306780F	**67X-068** 306780G
ATEX specification		**A**	**D**	**C**	**C**	**C**	**A**	**A**
Nominal power	W / HP	1600/2.14	1600/2.14	1600/2.14	1600/2.14	1600/2.14	700/0.9	1600/2.14
Nominal speed	rpm	4800	1250	600	350	160	100	80
Speed (idling)	rpm	9600	2500	1200	700	320	200	160
Nominal torque	Nm / in.lbs	3.1/27.4	12.2/108	25.4/224.8	43.6/385.86	95.4/844.3	66.9/592.1	191/1690
Start torque min.	Nm / in.lbs	4.7/41.6	18.3/161.95	38.2/338.07	65.4/578.79	143.2/1267.32	100/885	220/1947 [1]
Stall torque	Nm / in.lbs	6.05/53.54	23.2/205.32	48.3/427.45	82.9/733.66	181.4/1605.39	125/1106.25	220/1947 [1]
Max. admissible torque	Nm / in.lbs	-	-	-	-	-	-	220/1947
Air consumption	Nm^3/min/cfm	1.6/56.48	1.6/56.48	1.6/56.48	1.6/56.48	1.6/56.48	1.1/38.83	1.6/56.48
Weight	kg / lbs	5.9/12.98	6.1/13.42	6.1/13.42	6.7/14.74	6.7/14.74	6.7/14.74	8/17.6
Hose I.D., supply air/exhaust air	mm / in.	19 / 3/4	19 / 3/4	19 / 3/4	19 / 3/4	19 / 3/4	19 / 3/4	19 / 3/4

Motor size 8		right rotation				
Series 67X- ATEX conform	**Type** Part no.	**67X-008R** 3067800A	**67X-028R** 3067800B	**67X-038R** 3067800C	**67X-048R** 3067800D	**67X-058R** 3067800E
ATEX specification		**A**	**D**	**C**	**C**	**C**
Nominal power	W / HP	2200/2.95	2200/2.95	2200/2.95	2200/2.95	2200/2.95
Nominal speed	rpm	5000	1350	610	350	150
Speed (idling)	rpm	10000	2700	1220	700	300
Nominal torque	Nm / in.lbs	4.2/37.17	15.5/137.18	33.6/297.36	62/548.7	138.6/1226.61
Start torque min.	Nm / in.lbs	6.3/55.76	23.3/206.21	50.4/446.04	93.2/824.82	207.9/1839.92
Stall torque	Nm / in.lbs	8/70.8	29.5/261.08	63.8/464.63	118/1044.3	220/1947 [1]
Max. admissible torque	Nm / in.lbs	-	-	-	-	220/1947
Air consumption	Nm^3/min/cfm	2.1/74.13	2.1/74.13	2.1/74.13	2.1/74.13	2.1/74.13
Weight	kg / lbs	5.9/12.98	6.1/13.42	6.1/13.42	6.7/14.74	6.7/14.74
Hose I.D., supply air/exhaust air	mm / in.	19 / 3/4	19 / 3/4	19 / 3/4	19 / 3/4	19 / 3/4

Performance data relate to an air pressure of 6 bar (85 PSI) and lubricated air. With oil-free operation the output will be reduced by 10 - 20%.

1) Please take note of the maximum permissible torque for the gear. Please note that these motor gears are not stall-proof. If a higher application-based torque cannot be limited by the customer (e.g. by use of a slip clutch), please contact our application specialists to discuss an alternative solution.

Optional Equipment		**for motor size 8**
Flange incl. mounting screws	Part no.	4446272
Bracket incl. mounting screws	Part no.	4446285
Silencer: motor operates in one direction (right or left rotation)		
1 Hose nozzle	Part no.	410545 (G1/2)
1 Silencer	Part no.	129610A (G1/2/G3/4)
Silencer: motor is reversible (right or left rotation)		
2 Hose nozzles	Part no.	410545 (G1/2)
1 Silencer	Part no.	129610B (G3/4)
Maintenance unit with lubricator*	Part no.	821608 A
Connection thread		G 3/4
Maintenance unit without lubricator*	Part no.	826982 A
Connection thread		G 3/4
Replacement part set consisting of:		444788A for part no. 306780(0)B-C
vanes, sealant rings, o-rings and silencers	Part no.	444788B for part no. 306780(0)D-G 444788E for part no. 306780(0)A

*) Maintenance unit consists of pressure regulator valve, filter and optionally with or without lubricator

Motor size 8
Series 67X-
reversible, right rotation

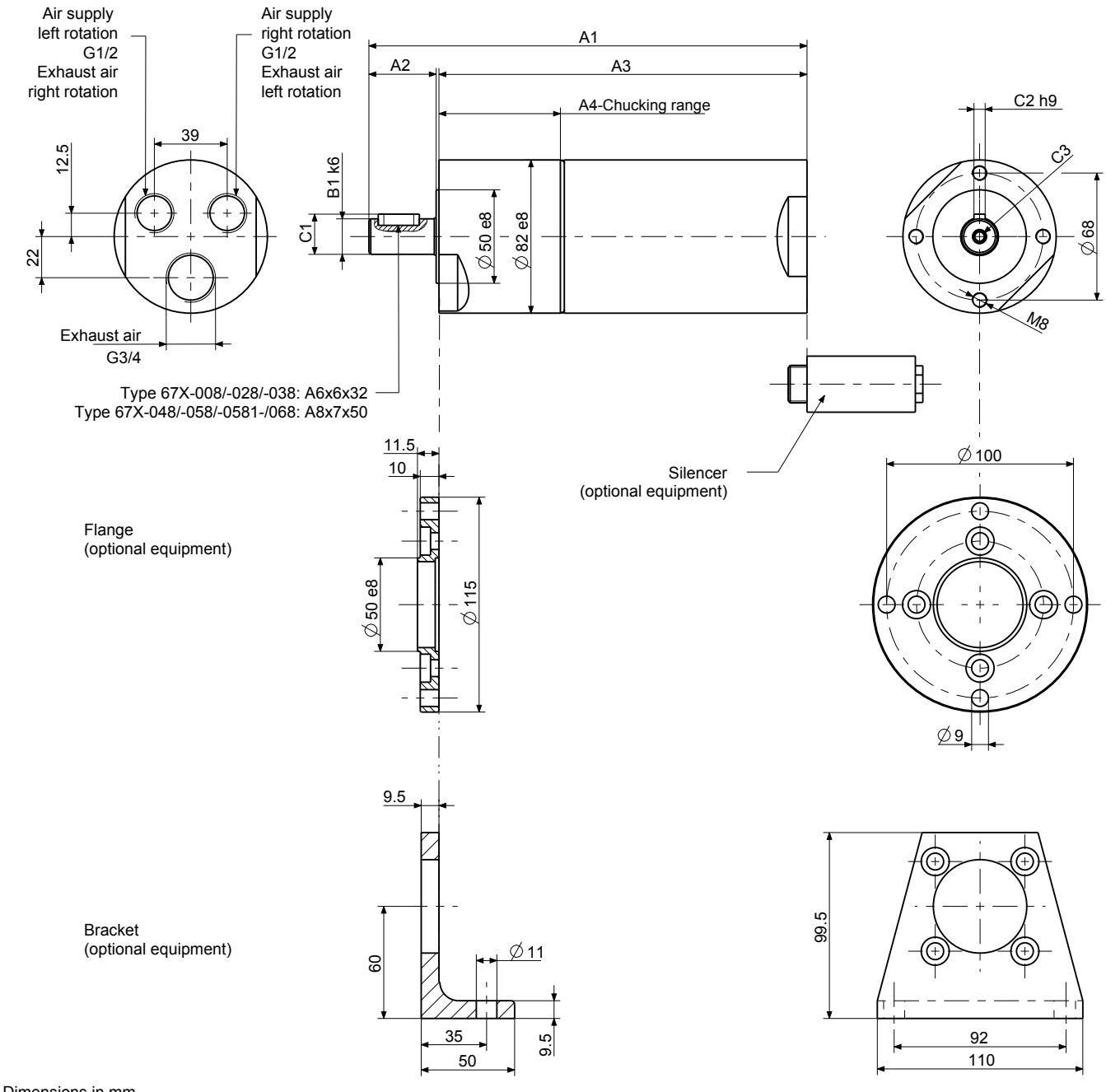

Dimensions in mm

p440236

Motor size	Series 67X- Type			Dimensions of motor (mm)							
				A1	A2	A3	A4	B1	C1	C2	C3
8	67X-008(R)	67X-028(R)	67X-038(R)	235	35	197	65	19	21.5	6	M6x15
	67X-048(R)	67X-058(R)	67X-0581	268	60	205	73	28	31	8	M10x20
	67X-068			311.5	61.5	248.5	116.5				

700/1600 W ADVANCED LINE AIR MOTOR with integrated holding brake

Motor size 8 with holding brake		reversible						
Series 67X- ATEX conform	**Type** Part no.	**67X-008B** 1031811A	**67X-028B** 1031811B	**67X-038B** 1031811C	**67X-048B** 1031811D	**67X-058B** 1031811E	**67X-0581B** 1031811F	**67X-068B** 1031811G
ATEX specification		**A**	**D**	**C**	**C**	**C**	**A**	**A**
Series 67- without ATEX-authorization	**Type** Part no.	**67-008B-1** 103181A	**67-028B-1** 103181B	**67-038B-1** 103181C	**67-048B-1** 103181D	**67-058B-1** 103181E	**67-0581B-1** 103181F	**67-068B-1** 103181G
Nominal power	W / HP	1600/2.14	1600/2.14	1600/2.14	1600/2.14	1600/2.14	700/0.9	1600/2.14
Nominal speed	rpm	4800	1250	600	350	160	100	80
Speed (idling)	rpm	9600	2500	1200	700	320	200	160
Nominal torque	Nm / in.lbs	3.1/27.4	12.2/108	25.4/224.8	43.6/385.86	95.4/844.3	66.9/592.1	191/1690
Start torque min.	Nm / in.lbs	4.7/41.6	18.3/161.95	38.2/338.07	65.4/578.79	143.2/1267.32	100/885	220/1947 [1]
Stall torque	Nm / in.lbs	6.05/53.54	23.2/205.32	48.3/427.45	82.9/733.66	181.4/1605.39	125/1106.25	220/1947 [1]
Brake torque	Nm / in.lbs	8.2	30.6	66.1	121.8	220/1947 [1]	152	220/1947 [1]
Max. admissible torque	Nm / in.lbs	-	-	-	-	220/1947	-	220/1947
Air consumption	Nm^3/min/cfm	1.6/56.48	1.6/56.48	1.6/56.48	1.6/56.48	1.6/56.48	1.1/38.83	1.6/56.48
Weight	kg / lbs	9/19.8	9.2/20.24	9.2/20.24	9.7/21.34	9.7/21.34	9.7/21.34	9.1/20.02
Hose I.D., supply air/exhaust air	mm / in.	19 / 3/4	19 / 3/4	19 / 3/4	19 / 3/4	19 / 3/4	19 / 3/4	19 / 3/4

Performance data relate to an air pressure of 6 bar (85 PSI) and lubricated air. With oil-free operation the output will be reduced by 10 - 20%.

1) Please take note of the maximum permissible torque for the gear. Please note that these motor gears are not stall-proof. If a higher application-based torque cannot be limited by the customer (e.g. by use of a slip clutch), please contact our application specialists to discuss an alternative solution.

Optional Equipment		**for motor size 8**
Flange incl. mounting screws	Part no.	4446272
Bracket incl. mounting screws	Part no.	4446285
Silencer: motor operates in one direction (right or left rotation)		
1 Hose nozzle	Part no.	410545 ($G^1/_2$)
1 Silencer	Part no.	129610A ($G^1/_2$/$G^3/_4$)
Silencer: motor is reversible (right or left rotation)		
2 Hose nozzles	Part no.	410545 ($G^1/_2$)
1 Silencer	Part no.	129610B ($G^3/_4$)
Maintenance unit with lubricator*	Part no.	821608A
Connection thread		G 3/4
Maintenance unit without lubricator*	Part no.	826982A
Connection thread		G 3/4
Replacement part set consisting of:		444788A / for part no. 103181(1)B-C 444788B / for part no. 103181(1)D-G 444788E / for part no. 103181(1)A
vanes, sealant rings, o-rings and silencers	Part no.	
Replacement part set for brake consisting of:		
discs, o-rings, pressure spring and silencer	Part no.	446096D

*) Maintenance unit consists of pressure regulator valve, filter and optionally with or without lubricator

Motor size 8 with holding break
Series 67(X)-
reversible

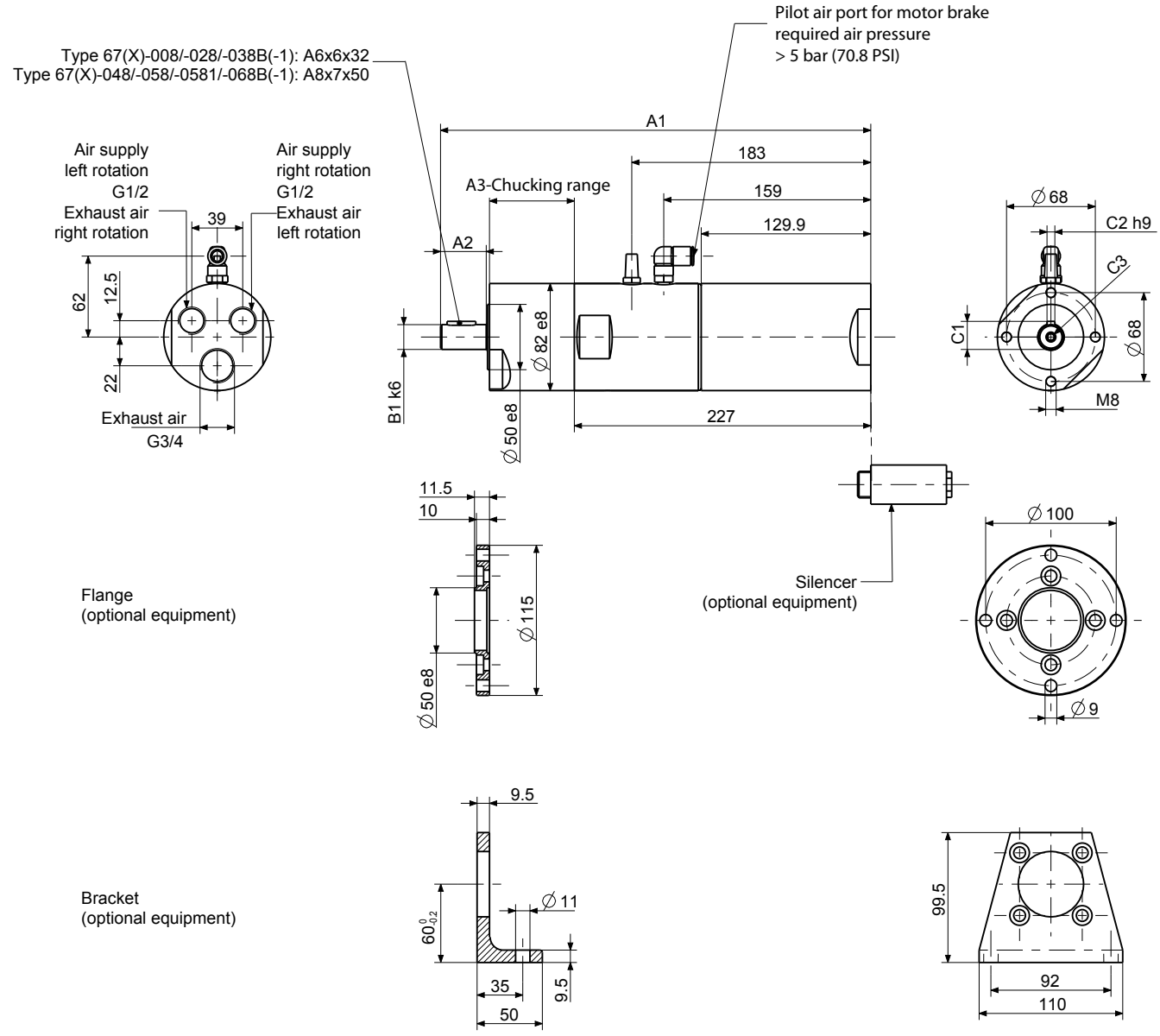

Dimensions in mm

p4401026

Motor size	Series 67(X)- with holding brake Type			Dimensions of motor (mm)						
				A1	A2	A3	B1	C1	C2	C3
8	67(X)-008B(-1)	67(X)-028B(-1)	67(X)-038B(-1)	330	35	65	19	21.5	6	M6x15
	67(X)-048B(-1)	67(X)-058B(-1)	67(X)-0581B(-1)	363	60	73	28	31	8	M10x20
	67(X)-068B(-1)			406.6	63	117				

Maximum allowable shaft load of the drive shaft

flattened shaft
Motor size 0 and 1

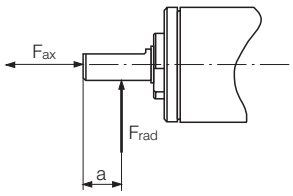

parallel key shaft
Motor size 2 to 8

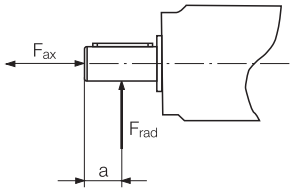

threaded shaft

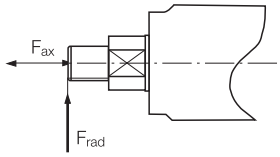

drill chuck

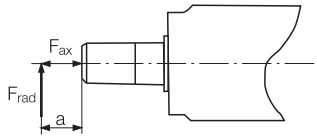

Motors with flattened shaft

Motor size	Part no.		Fax [N]	Frad [N]	a [mm]
0	306700B-E 3067000B-E		120	180	6
1	306710(0)A-I		200	240	7

Motors with parallel key shaft

Motor size	Part no.	Part no. with holding brake	Fax [N]	Frad [N]	a [mm]
2	306720(0)A-F,H		340	165	9
2.5	306725(0)A-H	107399A-H / 1073991A-H	510	1170	11
3	306730(0)A-D	103029A-D / 1030291A-D	510	1180	13
	306730(0)E-H,K	103029E-H,K / 1030291E-H,K	680	1040	14
	306730(0)I,L,M	103029P,R,S / 1030291P,R,S	1160	3870	20
	306730(0)N,O	103029N,O / 1030291N,O	1160	3920	20
6	306760(0)A-D,H,N	102750A-D,H,N / 1027501A-D,H,N	690	1190	14
	306760(0)E-G	102750E,F,G / 1027501E,F,G	800	2030	16
	306760(0)I,K,L	102750P,R,S / 1027501P,R,S	1160	3790	20
	306760(0)M	102750M / 1027501M	1160	3900	20
7	306770(0)A-D,H,N	103005A-D,H,N / 1030051A-D,H,N	690	1190	14
	306770(0)E-F	103005E,F / 1030051E,F	800	2030	16
	306770(0)I,K,L	103035P,R,S / 1030351P,R,S	1160	3790	20
	306770(0)M	103035M / 1030351M	1160	3900	20
8	306780A-C,G	1031811A-C,G / 103181A-C,G	1470	2790	16
	306780D-F	1031811D-F / 103181D-F	1560	2730	30
	3067800A-C		1470	2790	16
	3067800D,E		1470	2580	30

Motors with threaded spindle

Motor size	Part no.		Fax [N]	Frad [N]	a [mm]
2	3067207A-H		340	110	0
2.5	3067257A-L		510	880	0
3	3067307A-D		510	860	0
	3067307E-H		680	820	0
	30673014A-D		510	860	0
	30673014E,F		680	820	0
6	1141327B-H		690	1000	0

Motors with drill chuck

Motor size	Part no.		Fax [N]	Frad [N]	a [mm]
6	114132B-H		800	350	80

Allowable force for 10 million spindle rotations with 90 % survival probability of bearing.

Noise level of the motors

Noise level for motors of the series 67(X) - without or with silencer (see optional equipment))

for Motor size	Noise level dB (A) without silencer	Noise level dB (A) with silencer		Part no. silencer	
		for right rotational motors	for reversible motors	in one turn direction R/L	reversible
0	98	assembly is not possible	85	129588A	-
1	95	90	85	117968A	117968A
2	99	78.8	92	129596A	129596B
2.5	100	81.1	82	129601A	129601B
3	103	83.4	91	129602A	129601B
6	104	87.2	94	129563A	129563B
7	106	90.2	88	129563A	129563B
8	108	85.6	95	129610A	129610B

Use in potentially explosive environments

The correspondingly marked motors are suitable for use in potentially explosive environments.

Optional Silencer sets for further reduction of the noise level

Silencer sets for motors of the build series 67(X)-

for Motor size	Motor operates in one turn direction R/L (clockwise or anticlockwise rotation), Part no.	Motor operates reversible U (clockwise and anticlockwise rotation), Part no.	Noise level approx. dB (A)	
			in one turn direction R/L	reversible
1	446354B	446354A	71	71
2	440015B	440015A	69	70
2,5	440016B	440016A	72	71
3	440018B	440018A	74	70
6	4400191B	4400191A	82	76
7	4400191B	4400191A	86	79
8	440020B	440020A	85	87

Motor size 1

R/L U

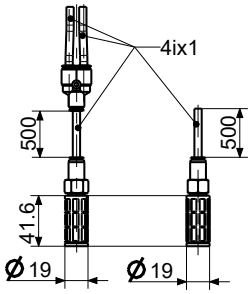

Motor size 2

R/L U

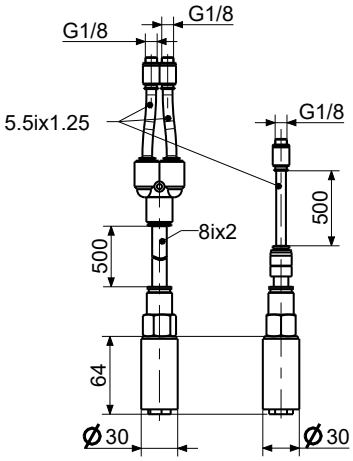

Motor size 2.5

R/L U

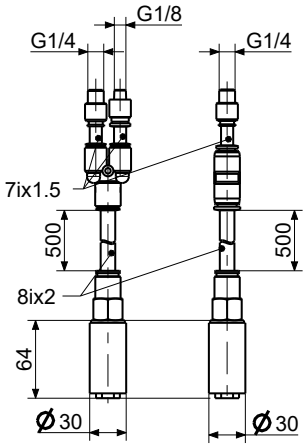

Motor size 3

R/L U

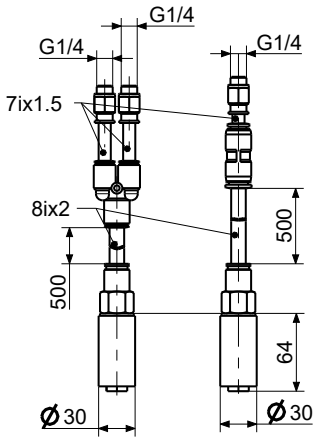

Motor size 8

R/L U

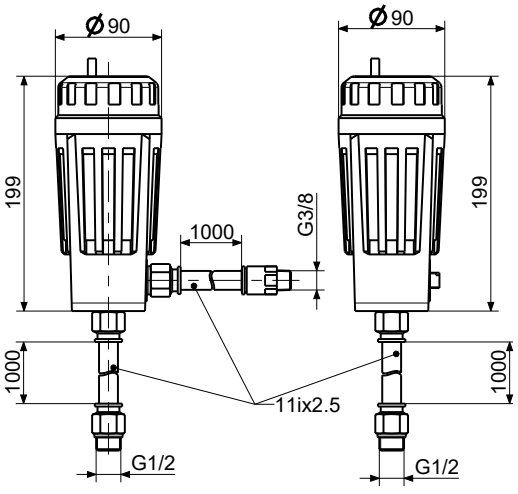

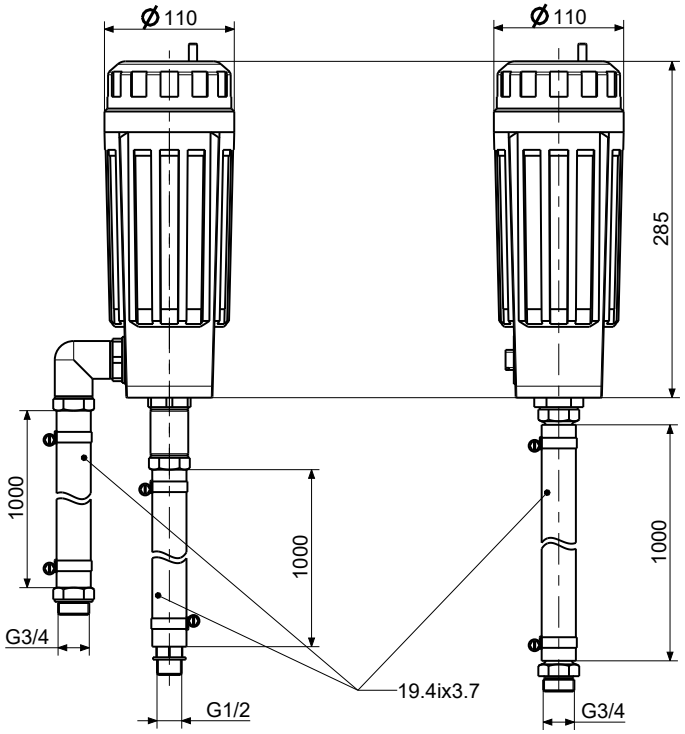

Dimensions in mm
p122985

Speed standard values (rpm) for HSS spiral-drills

Cutting Speed	35 m/min (115 ft./min)	28 m/min (90 ft./min)	25 m/min (80 ft./min)	14 m/min (45 ft./min)	11 m/min (35 ft./min)	7 m/min (23 ft./min)	22 m/min (70 ft./min)	12 m/min (40 ft./min)	50 m/min (165 ft./min)	90 m/min (300 ft./min)	165 m/min (540 ft./min)	210 m/ min (690 ft./min)
	Carbon steel			Alloy steel		Stainless steel	Cast-I ron		Copper Bronze Brass	Lightweight-Metal		Magnesium-Alloy[2])
Drill dia. mm/in.	up to 500 N/mm² (30 long tons/ sq. in.)	500 - 700 N/mm² (30 - 45 long tons/ sq. in.)	above 700 N/mm² (45 long tons/ sq. in.)	700 - 900 N/mm² (45 - 55 long tons/ sq. in.)	900 - 1100 N/mm² (55 - 70 long tons/ sq. in.)		up to 180 N/mm² (10 long tons/ sq. in.)	above 180 N/mm² (10 long tons/ sq. in.)		common alloy mild brass [1])	hard	
1/0.04	11000	8800	7800	4400	3400	2200	7000	3800	16000	28000	52000	66000
2/5/64	5500	4400	3900	2200	1700	1100	3500	1900	8000	14000	26000	33000
3/1/8	3700	3000	2600	1500	1100	730	2300	1300	5300	9000	17300	22000
4/5/32	2800	2200	2000	1100	850	550	1700	950	4000	7000	13000	16500
5/13/64	2200	1800	1600	880	680	440	1400	760	3200	5600	10400	13200
6/15/64	1900	1500	1300	735	570	365	1200	630	2700	4800	8700	11000
7/ 9/32	1600	1300	1100	630	485	315	1000	540	2300	4000	7400	9400
8/5/16	1400	1100	975	550	425	275	875	475	2000	3500	6500	8300
9/23/64	1200	975	865	490	380	245	780	420	1800	3100	5800	7400
10/25/64	1100	880	780	440	340	220	700	380	1600	2800	5200	6600

[1]) Speed therefore for triplet of duro-plates, hard-paper and hard tissues, however instead of the HSS-drills we recommend quickly steel-drills equipped with hard-metal K 10
[2]) for thermos-plates, we recommend double the values

Pressure regulator valve for ATEX conform brake motors



A pressure regulator valve is included within our shipment of the ATEX conform brake motors.

This safety valve turns off the air supply in the brake leads automatically when the pressure falls under 5 bar.

This prevents an irregular temperatur increase.

The layout of your air motor:

Calculating the motor power

$$P = \frac{M \times n}{9550}$$

P = Power Output in kW
M = Nominal-Torque in Nm
n = Nominal-Speed in rpm

The optimal working range of an air motor is close to the nominal speed. If you need lower speeds than are mentioned in the catalogue you can reduce the speed by throttling the exhaust air with only a slight loss of power. By throttling the supply air or decreasing the operating pressure the speed, torque and power are reduced.

All performance data of the Yingshi Precision air motors is based on operating pressure of 6 bar and the opening cross-section mentioned in the motor data. If your application conditions are different from this then you will find a comprehensive guide to the layout of our motors in our product catalog.

= optimal working range of the air motor

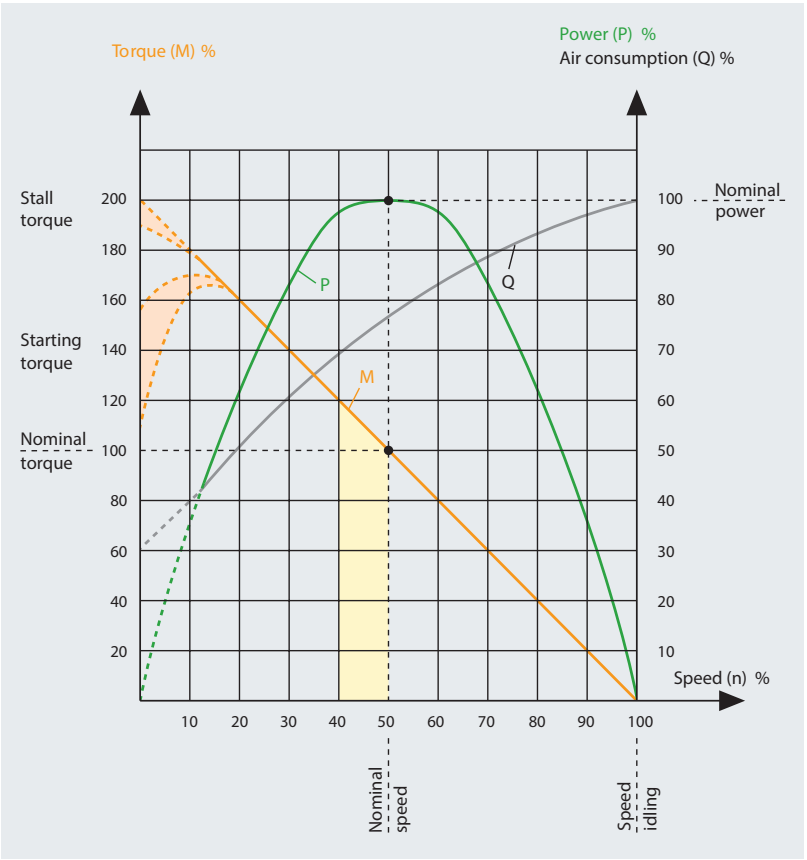

Do you need support in selecting the right drive system?

Tell us your operational conditions and our application consultants will be happy to help. Please use the following request form and send it to: your Yingshi Precision sales contact

Application:				
In what kind of environment will the motor be installed?	ATEX requirement / explosion safety?		☐ yes	☐ no
	if yes, which safety class:			
	food industry conformity?		☐ yes	☐ no
	sterilisable?		☐ yes	☐ no
	acid resistant?		☐ yes	☐ no
	steam resistant?		☐ yes	☐ no
Application conditions:	constant operation (24 hrs, non-stop)		☐ yes	☐ no
	duty cycle in hrs/day:			
	days/year:			
	cycle time (s):			
	motor loaded to stall?		☐ yes	☐ no
	self-locking?		☐ yes	☐ no
Required turn direction:	☐ left	☐ right	☐ reversible	
	(view from air inlet)			
Motor performance:	power:			W
	nominal torque:			Nm
	nominal speed:			rpm
Performance influencing application conditions:	operating pressure (at motor inlet):			bar
	operation with lubricated air possible?		☐ yes	☐ no
	smallest opening cross-section of connection pieces and hoses?			mm
External motor design:	☐ standard steel	☐ non-corrosive	☐ aluminium	
	☐ plastics	☐ ceramics		
	other:			
Drive spindle design:	drive shaft requirements:			
	(e. g. keyed shafts, square end, hexagonal, collet, drill chuck taper, etc.)			
	required dimensions:			
Motor fixture design:	mounting requirements: (bracket, flange, etc.)			
	required dimensions:			
Additional components:	☐ holding brake	☐ operational brake		
	gear box:			
Price range:				
Annual requirement:				